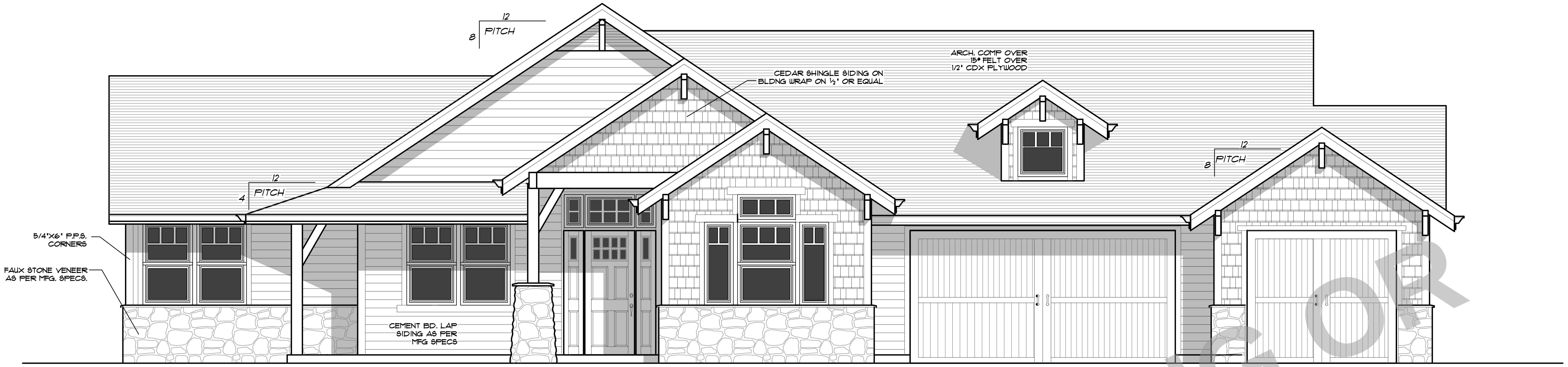

FRONT ELEVATION

S.E. KELSO RD. BORING OR

REAR ELEVATION

PLAN NO: 9312
DATE: 5-9-17
SCALE: 1/4" = 1'-0"

THE HICKORY HAGGERTY REVISION

CLIENT NAME:

LOCATION

SHEET TITLE: ELEVATIONS

SQUARE FEET:

DESIGN PROVIDENCE, LLC
PMB 362 12042 S.E. SUNNYSIDE RD. CLACKAMAS, OR 97015
Phone & Fax: 503-760-0446 Email: Designprovidence@Q.com
Web: DesignprovidenceLLC.com

THESE PLANS HAVE BEEN LICENSED TO THE CUSTOMER FOR THE USE IN CONSTRICTION OF ONE BUILDING ONLY & ARE SUBJECT TO THE CONDITIONS OF LICENSE ACCEPTED BY THE CUSTOMER. USE OF ANY PART OF THE PLANS BY ANY PARTY OTHER THAN THE CUSTOMER, EXCEPT ON LOAN BY THE CUSTOMERTO THIRD PARTIES NECCESSARY TO ASSIST THE CUSTOMER IN USING THE PLANS IS NOT RECCOMENDED. THE USE OF THIS PLAN FOR OTHER PROJECTS WOULD BY WORDING OF AFFORMENTIONED LISCENCE VOID ANY TECHNICAL SUPPORT FOR ANY PROJECT IN RELATIONS TO THESE PLANS. IF A PARTY IS INTERESTED IN THE USE OF THESE PLANS, IT IS RECCOMENDED THAT THEY CONTACT DESIGNER FOR ANALASIS FOR FEASABILITY AND PROPER LISCENSING AGREEMENT PRIOR TO CONSIDERATION. THIS PLAN HAS BEEN PREPARED CAREFULLY FOR USE BY THE CUSTOMERS. HOWEVER, ADAPTATION OF THE PLANS TO MEET SPECIFIC STATE & LOCAL BUILDING CODES & REGULATIONS, & SPECIFIC SITE CONDITIONS, IS THE RESPONSIBILITY OF THE CONTRACTOR. IN ADDITION CUSTOMER IS RESPONSIBLE FOR ANY DAMAGES RELATING TO THE ACCURACY & OVERALL INTEGRITY OF THE PLANS IN EXCESS OF THE LICENSE FEE PAID FOR THEIR USE. THE CONTRACTOR THEREFORE MUST CAREFULLY INSPECT ALL DIMENSIONS & DETAILS IN THE PLANS FOR

UNAUTHORIZED USE OR COPYING OF THE PLANS, OR THE DESIGN THEY DEPICT, INFRINGES RIGHTS UNDER THE COPYRIGHT ACT. INFRINGERS FACE LIABILITES THAT INCLUDE PENALTIES OF UP TO $20,000 PER WORK INFRINGED, AND UP TO $100,00 PER WORK INFRINGED WILLFULLY.

SHEET NR: 1

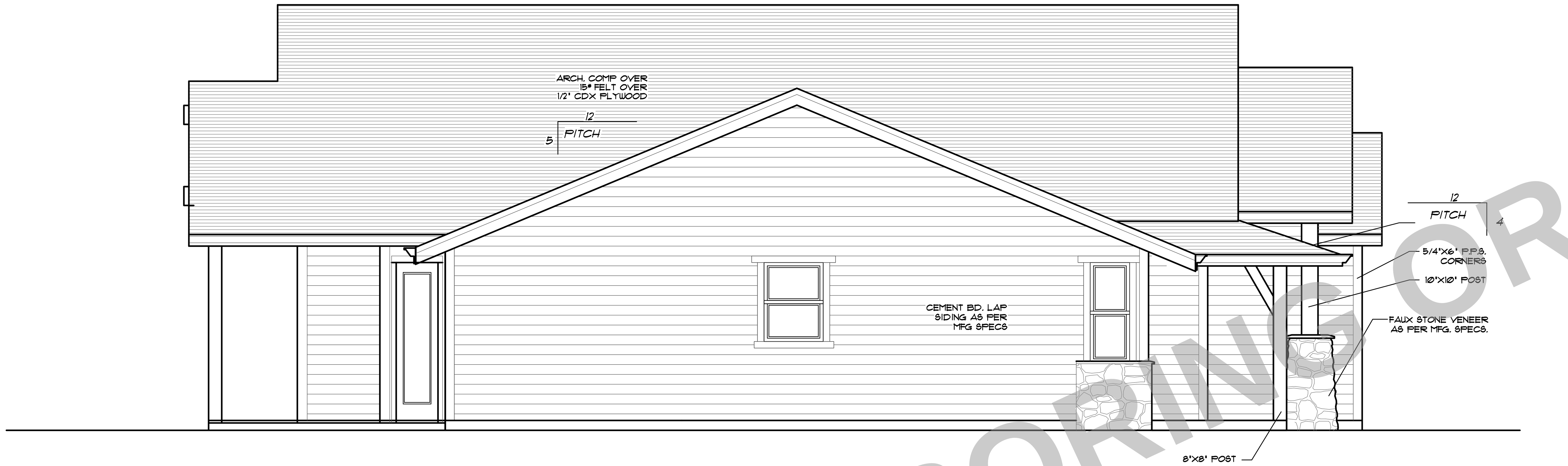

LEFT ELEVATION

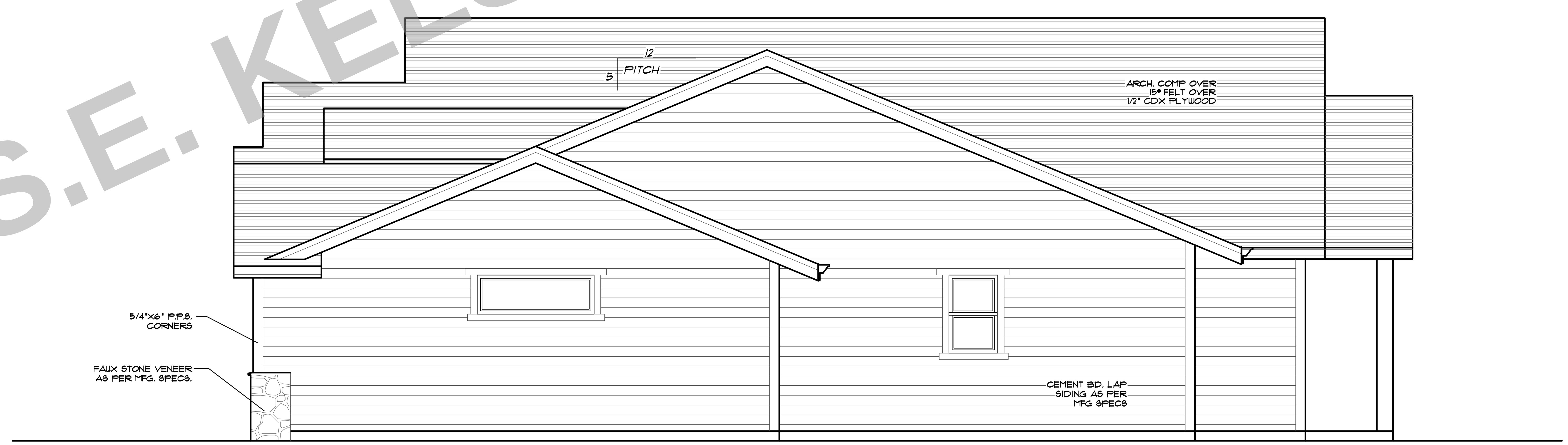

RIGHT ELEVATION

S.E. KELSO RD. BORING OR

PLAN NO: 9312
DATE: 5-9-17
SCALE: 1/4" = 1'-0"

CLIENT NAME: THE HICKORY HAGGERTY REVISION
LOCATION:
SHEET TITLE: ELEVATIONS
SQUARE FEET:

DESIGN PROVIDENCE, LLC

SHEET NR: 2

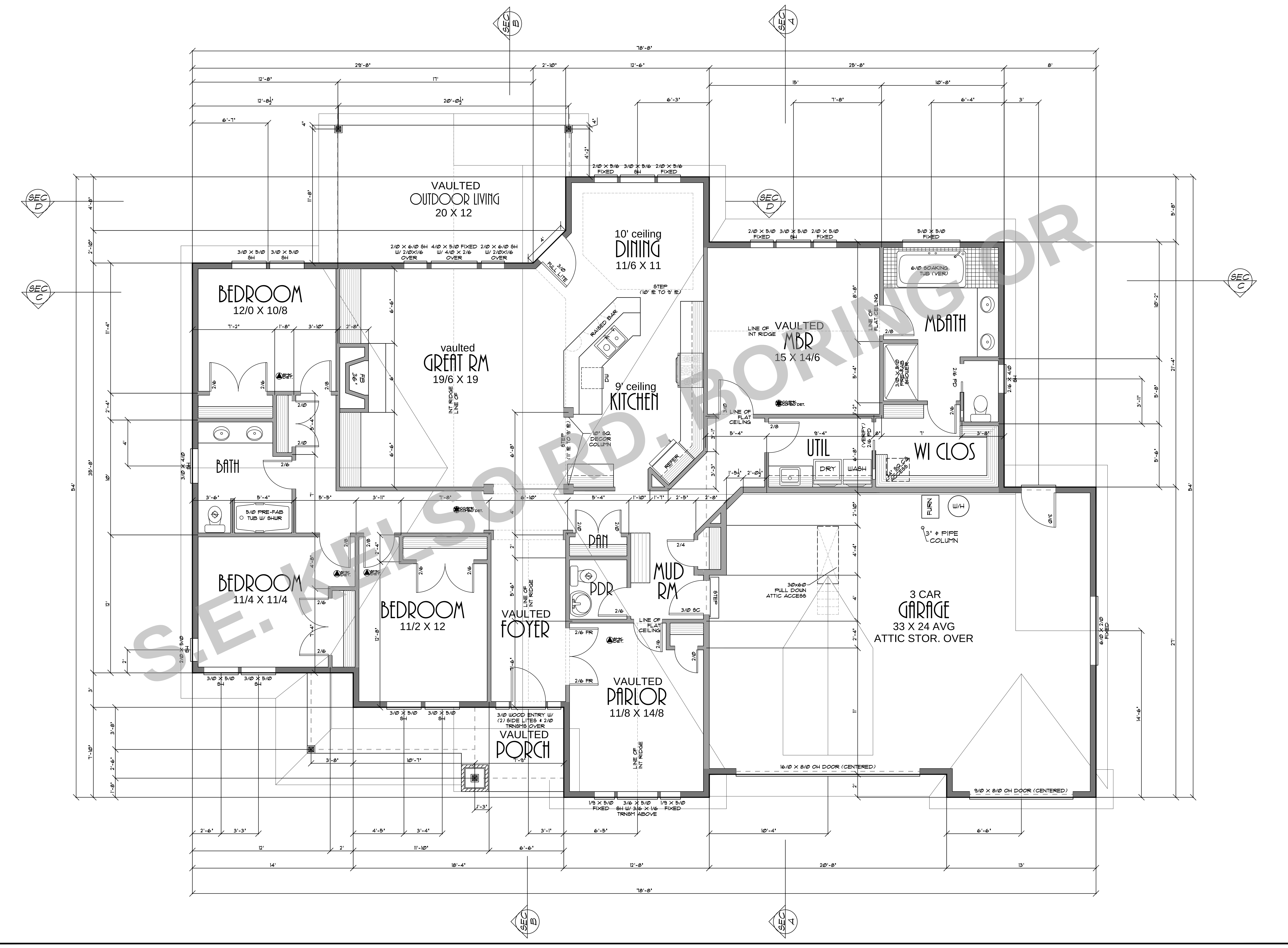

PLAN NO:	9312
DATE:	5-9-17
SCALE:	1/4" = 1'-0"
CLIENT NAME:	THE HICKORY HAGGERTY REVISION
LOCATION	
SHEET TITLE:	MAIN FLOOR PLAN
SQUARE FEET:	2460 SQUARE FEET

DESIGN PROVIDENCE, LLC

SHEET NR: 3

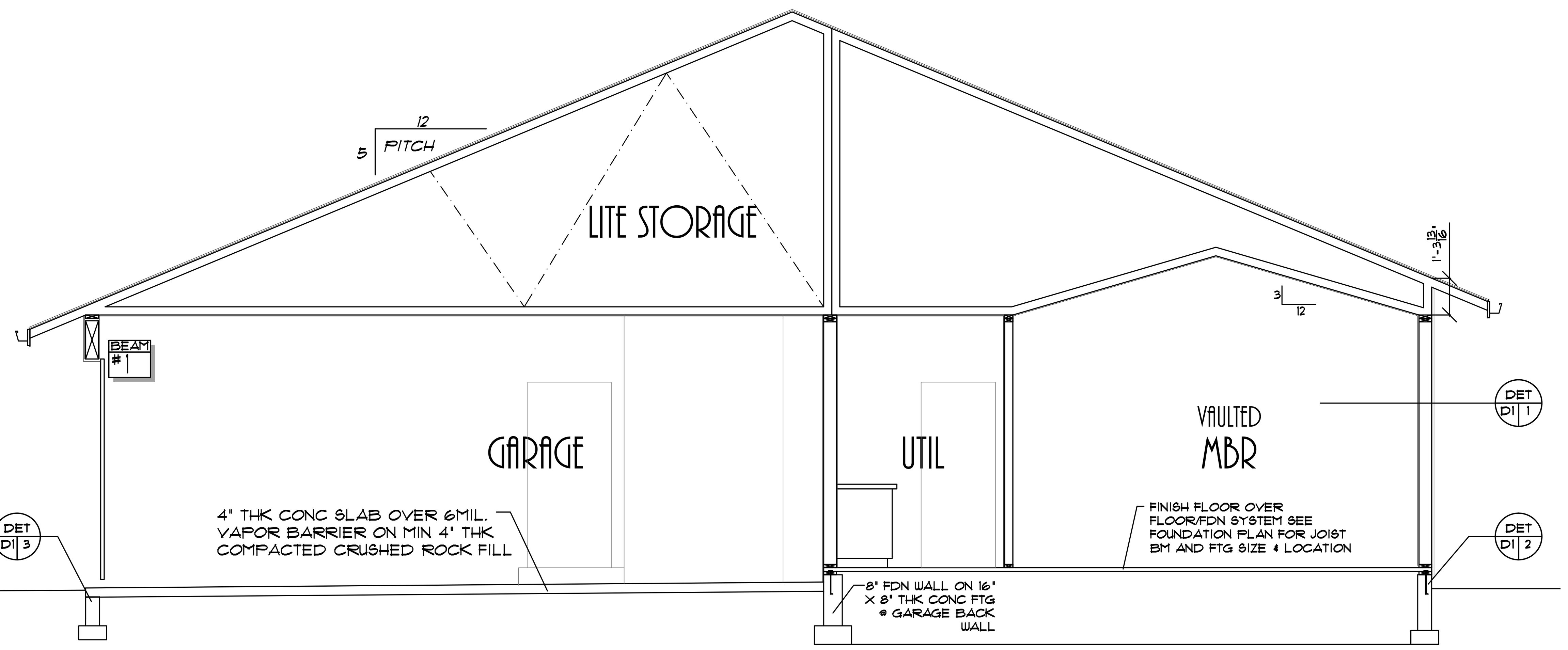

CROSS SECTION A-A

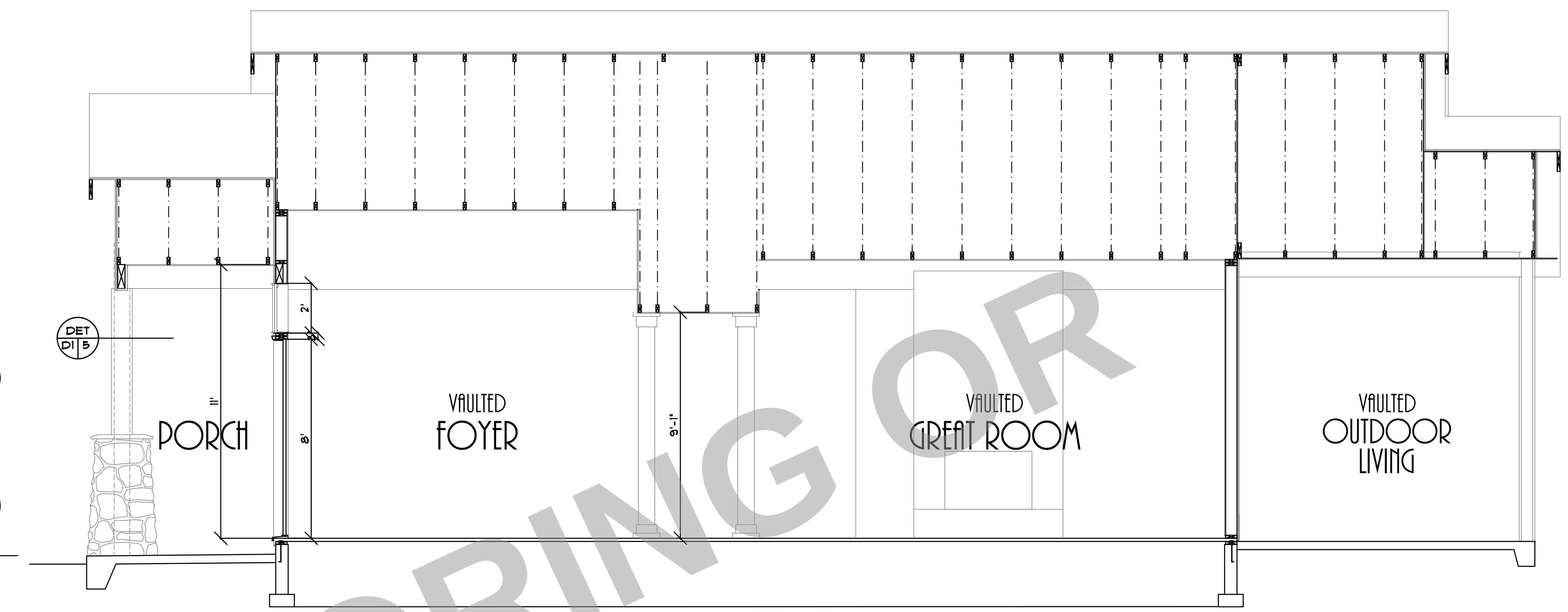

CROSS SECTION B - B

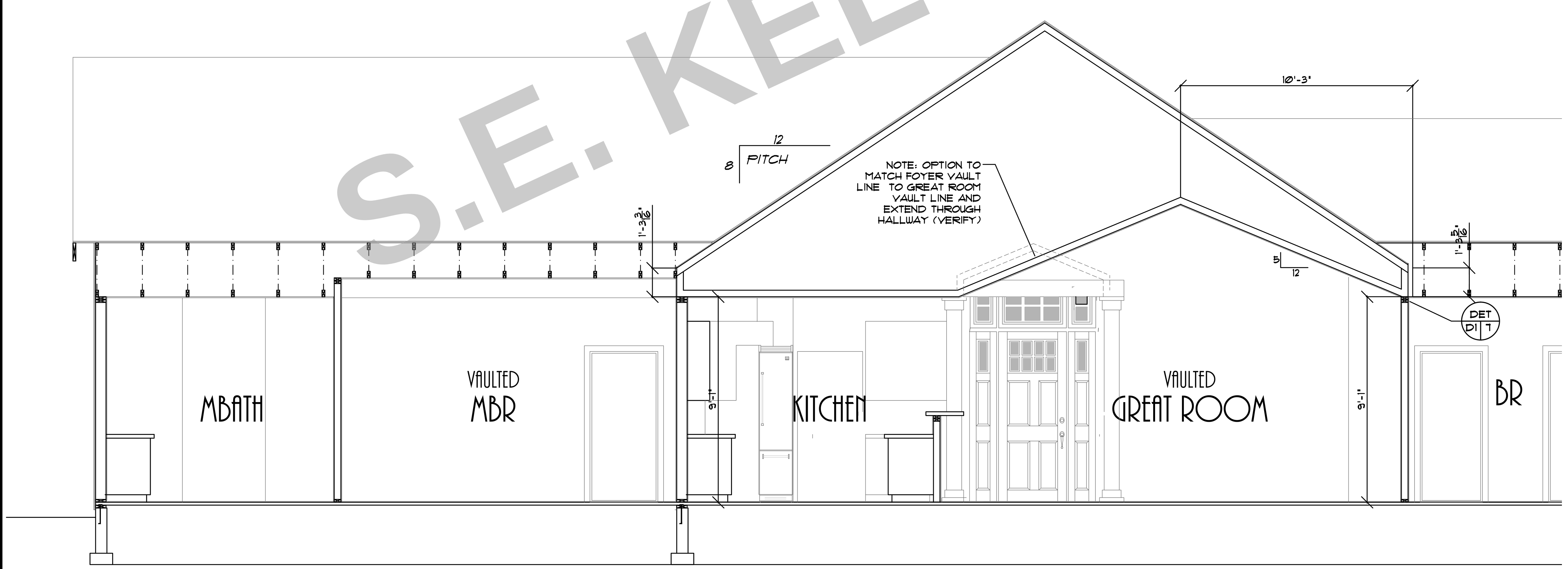

CROSS SECTION C-C

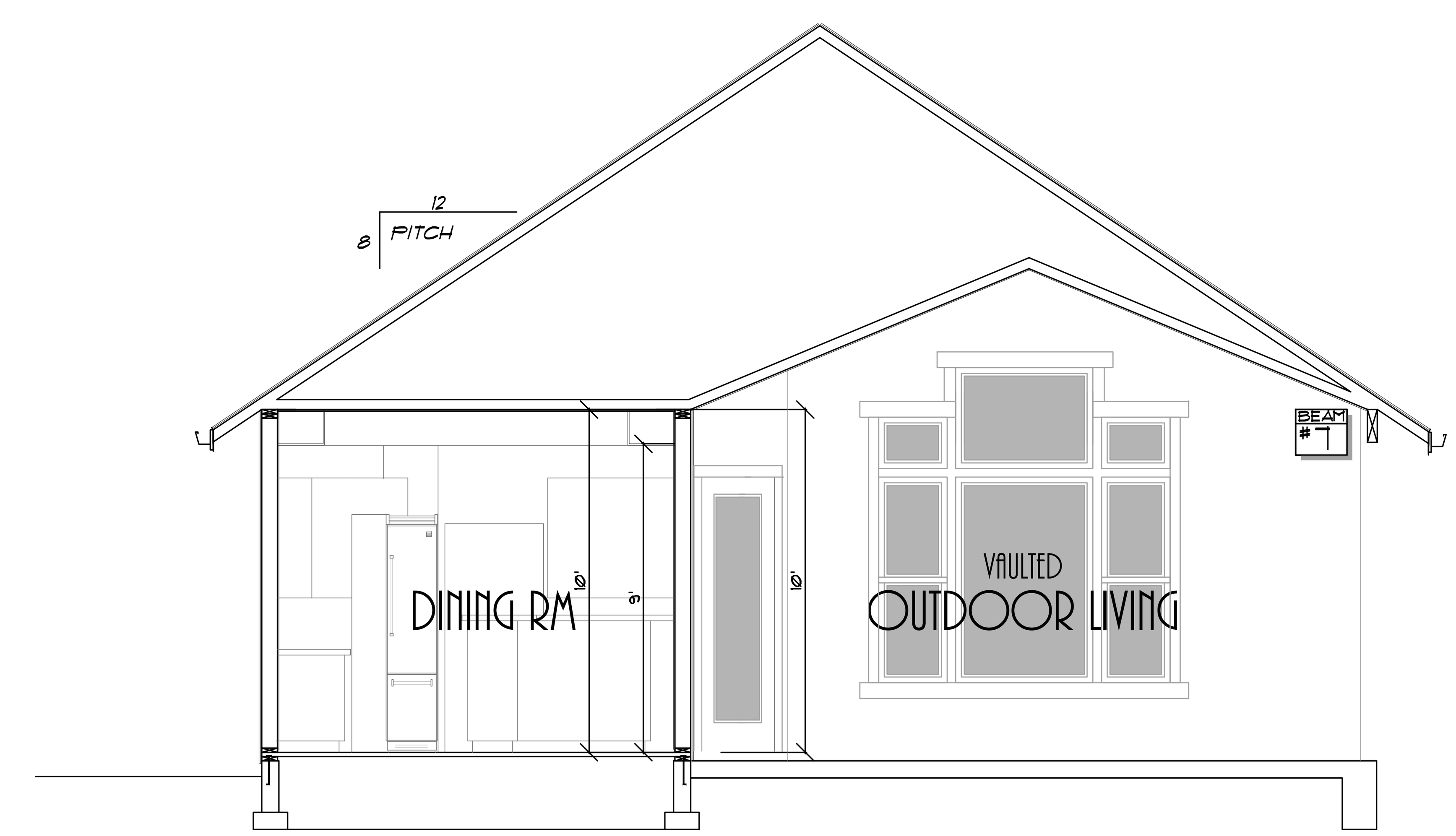

CROSS SECTION D-D

S.E. KELSO RD. BORING OR

PLAN NO: 9312
DATE: 5-9-17
SCALE: 1/4" = 1'-0"

CLIENT NAME: THE HICKORY HAGGERTY REVISION

LOCATION:

SHEET TITLE: CROSS SECTIONS

SQUARE FEET:

DESIGN PROVIDENCE, LLC

SHEET NR: 4

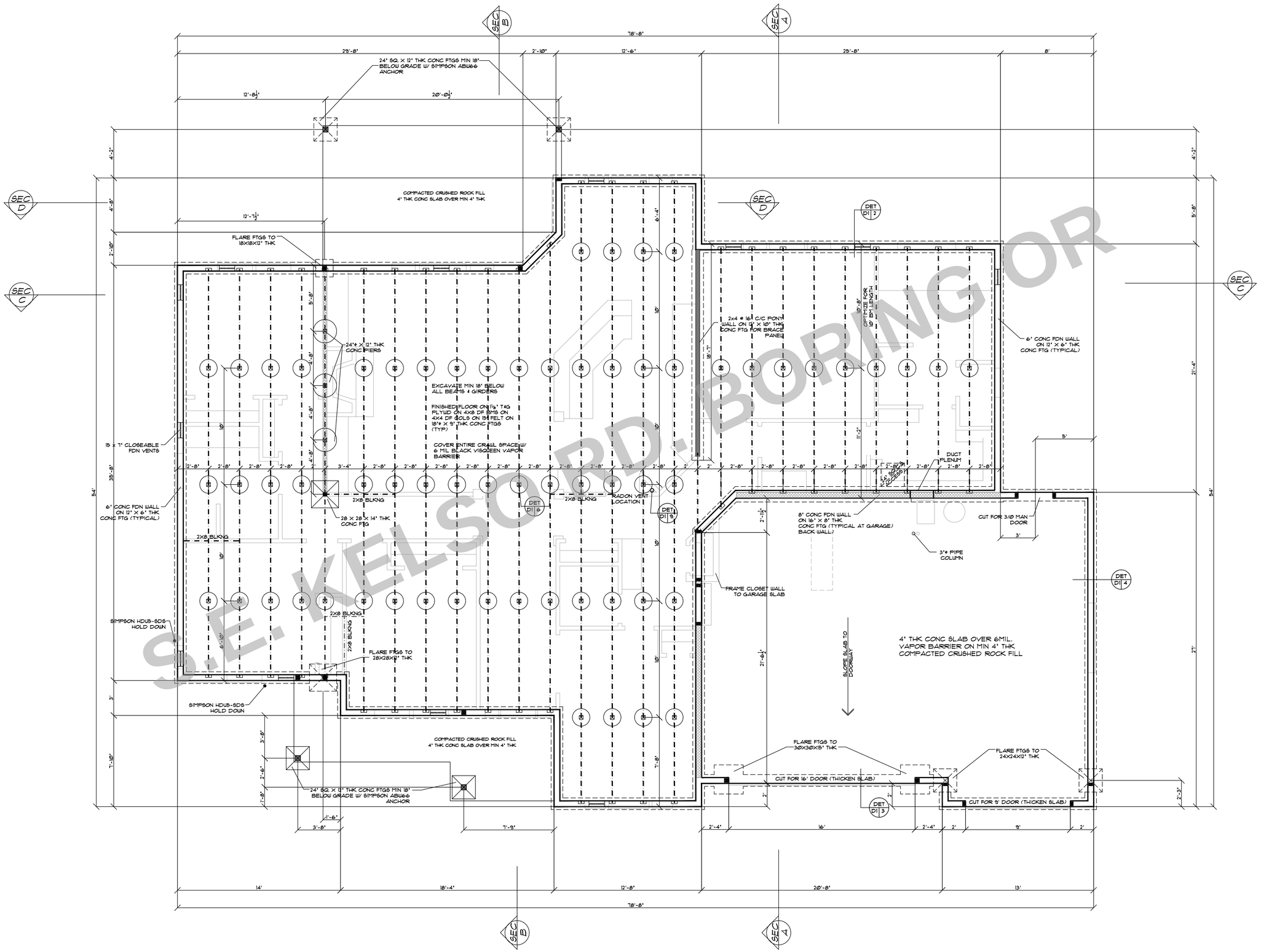

S.E. KELSORD. BORING OR

PLAN NO: 9312

DATE: 5-9-17

SCALE: 1/4" = 1'-0"

CLIENT NAME: THE HICKORY HAGGERTY REVISION

LOCATION

SHEET TITLE: FOUNDATION PLAN

SQUARE FEET:

DESIGN PROVIDENCE, LLC
RP RH
P/F: 503.210.0242 S.E. SUNNYSIDE RD. CLACKAMAS, OR 97015
Phone & Fax: 503.655.1560 Cell: 503.210.0242 E-Mail: designprovidence@yahoo.com
Web: designprovidence.com

THESE PLANS HAVE BEEN LICENSED TO THE OWNER FOR THE USE IN CONSTRUCTION OF ONE BUILDING ONLY & ARE SUBJECT TO OUR COPYRIGHT. THEY MAY NOT BE REPRODUCED OR TRANSFERRED TO ANY OTHER PARTY WITHOUT WRITTEN PERMISSION. ALL DIMENSIONS & DETAILS MUST BE VERIFIED ON THE JOB SITE. ANY DISCREPANCIES MUST BE REPORTED TO THE DESIGNER BEFORE PROCEEDING WITH THE WORK. ANY ALTERATIONS OR DEVIATIONS FROM THE PLANS WITHOUT PRIOR WRITTEN CONSENT OF THE DESIGNER MAY RESULT IN THE ABANDONMENT OF THE PROJECT AS FAR AS THE DESIGNER IS CONCERNED. ALL ALTERATIONS, ADDITIONS OR DEVIATIONS MUST BE PRICED SEPARATELY. ALL DIMENSIONS & DETAILS IN THE PLANS FOR MUST CAREFULLY INSPECT ALL DIMENSIONS & DETAILS IN THE PLANS FOR ANY DISCREPANCY OR ERROR. ALL DIMENSIONS & DETAILS MUST BE VERIFIED ON THE JOB SITE. ANY DISCREPANCY OR ERROR MUST BE REPORTED TO THE DESIGNER BEFORE PROCEEDING WITH THE WORK. ANY WORK DONE WITHOUT PRIOR WRITTEN CONSENT OF THE DESIGNER MAY BE REMOVED, AND UP TO $10,000 PER WORK WITHOUT WRITTEN CONSENT.

SHEET NR:

5

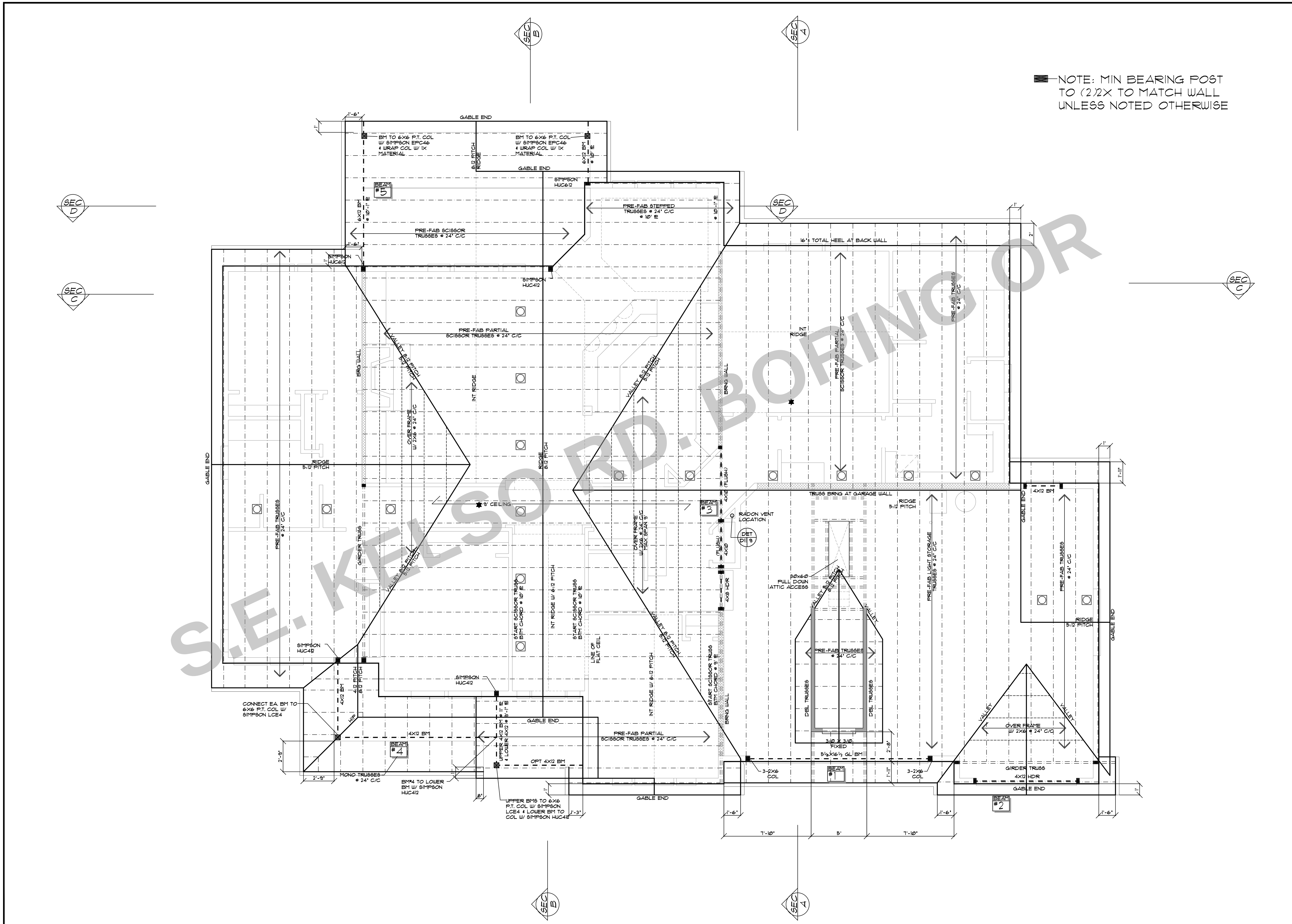

PLAN NO:	9312
DATE:	5-9-17
SCALE:	1/4" = 1'-0"
CLIENT NAME:	THE HICKORY HAGGERTY REVISION
LOCATION:	
SHEET TITLE:	ROOF FRAMING PLAN
SQUARE FEET:	

DESIGN PROVIDENCE, LLC
PMB 362 12042 S.E. SUNNYSIDE RD. CLACKAMAS, OR 97015
Phone & Fax: 503-760-0446 Email: Designprovidence@Q.com
Web: DesignprovidenceLLC.com

SHEET NR:

6

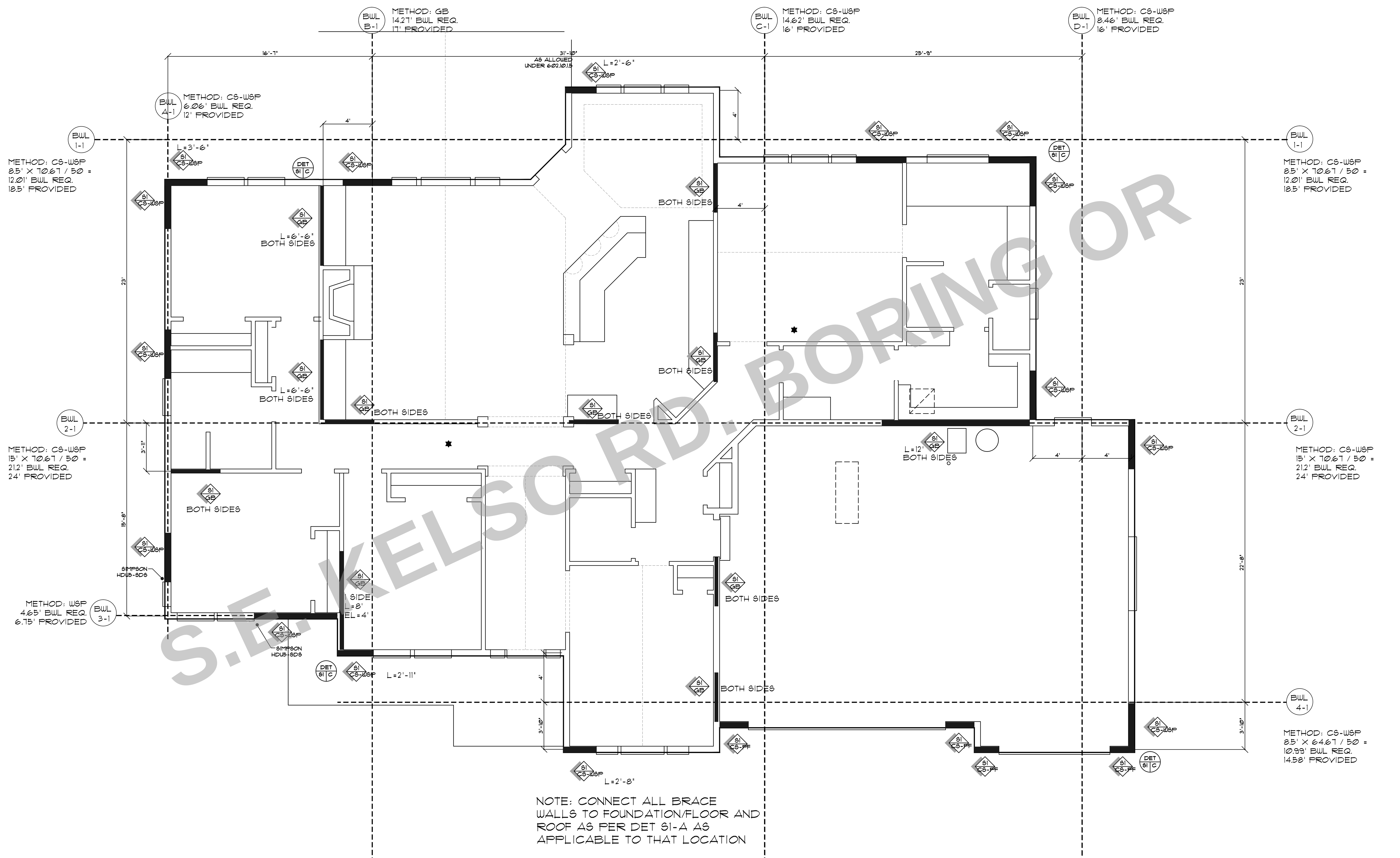

PLAN NO: 9312
DATE: 5-9-17
SCALE: 1/4" = 1'-0"

CLIENT NAME: THE HICKORY HAGGERTY REVISION

LOCATION:

SHEET TITLE: PRESCRIPTIVE WALL BRACING

SQUARE FEET:

DESIGN PROVIDENCE LLC

SHEET NR: S

S1 WSP	WSP	Wood structural panel (see Section R604)	3/8″	For exterior sheathing see Table R602.3(3) For interior sheathing see Table R602.3(1)

	METHOD	MATERIAL	MINIMUM THICKNESS	FIGURE	CONNECTION CRITERIA
S1 CS-WSP	CS-WSP	Wood structural panel	3/8″		6d common (2″ × 0.113″) nails at 6″ spacing (panel edges) and at 12″ spacing (intermediate supports) or 16 ga. × 1 3/4 staples at 3″ spacing (panel edges) and 6″ spacing (intermediate supports)

S1 GB	GB	Gypsum board	1/2″		Nails or screws at 7″ spacing at panel edges including top and bottom plates; for all braced wall panel locations for exterior sheathing nail or screw size, see Table R602.3(1); for interior gypsum board nail or screw size, see Table R702.3.5

TABLE R602.3(3)
REQUIREMENTS FOR WOOD STRUCTURAL PANEL WALL SHEATHING USED TO RESIST WIND PRESSURES[a,b,c]

MINIMUM NAIL		MINIMUM WOOD STRUCTURAL PANEL SPAN RATING	MINIMUM NOMINAL PANEL THICKNESS (inches)	MAXIMUM WALL STUD SPACING (inches)	PANEL NAIL SPACING		MAXIMUM WIND SPEED (mph)		
							Wind exposure category		
Size	Penetration (inches)				Edges (inches o.c.)	Field (inches o.c.)	B	C	D
6d Common (2.0″ × 0.113″)	1.5	24/0	3/8	16	6	12	110	90	85
8d Common (2.5″ × 0.131″)	1.75	24/16	7/16	16	6	12	130	110	105
				24	6	12	110	90	85

For SI: 1 inch = 25.4 mm, 1 mile per hour = 0.447 m/s.

a. Panel strength axis parallel or perpendicular to supports. Three-ply plywood sheathing with studs spaced more than 16 inches on center shall be applied with panel strength axis perpendicular to supports.

b. Table is based on wind pressures acting toward and away from building surfaces per Section R301.2. Lateral bracing requirements shall be in accordance with Section R602.10.

c. Wood Structural Panels with span ratings of Wall-16 or Wall-24 shall be permitted as an alternate to panels with a 24/0 span rating. Plywood siding rated 16 oc or 24 oc shall be permitted as an alternate to panels with a 24/16 span rating. Wall-16 and Plywood siding 16 oc shall be used with studs spaced a maximum of 16 inches on center.

S1 ABP

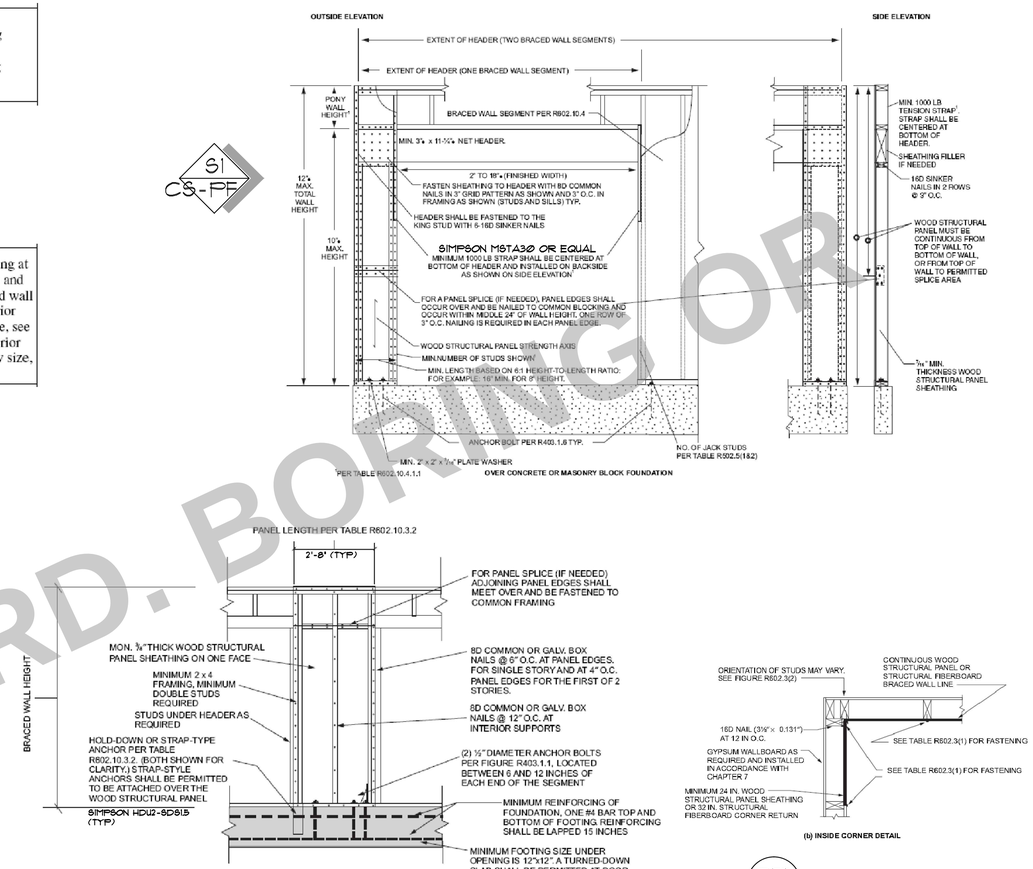

S1 CS-PF

SI: 1 inch = 25.4 mm.

FIGURE R602.10.3.2
ALTERNATE BRACED WALL PANEL

(b) INSIDE CORNER DETAIL

DET S1 C
INSIDE CORNER

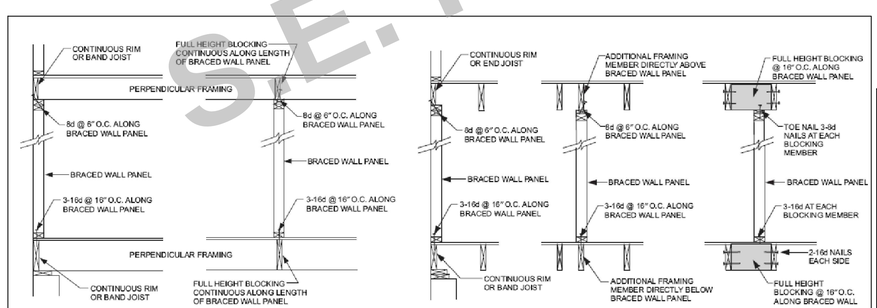

h = 25.4 mm. inch = 25.4 mm.

FIGURE R602.10.6(1)
BRACED WALL PANEL CONNECTION WHEN PERPENDICULAR TO FLOOR/CEILING FRAMING

FIGURE R602.10.6(2)
BRACED WALL PANEL CONNECTION WHEN PARALLEL TO FLOOR/CEILING FRAMING

DET S1 A

NOTE: CONNECT ALL BRACE WALLS TO FOUNDATION/FLOOR AND ROOF AS PER DET S1-A AS APPLICABLE TO THAT LOCATION

DET S1 A

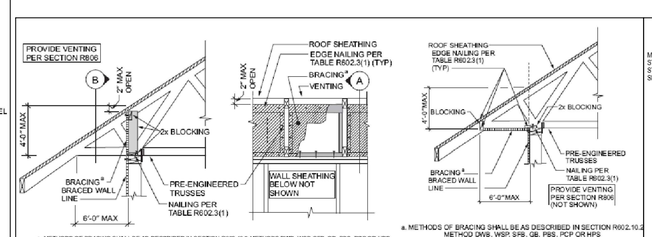

For SI: 1 inch = 25.4 mm.

FIGURE R602.10.6.2(2)
BRACED WALL PANEL CONNECTION OPTION TO PERPENDICULAR RAFTERS OR ROOF TRUSSES

DET S1 B1 OR DET S1 B2

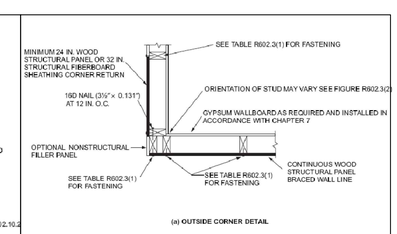

(a) OUTSIDE CORNER DETAIL

DET S1 C
OUTSIDE CORNER

S.E. KELSO RD. BORING OR

PLAN NO: 9312
DATE: 5-9-17
SCALE: 1/4" = 1'-0"

CLIENT NAME: THE HICKORY HAGGERTY REVISION
LOCATION
SHEET TITLE: SHEAR DETAILS
SQUARE FEET:

DESIGN PROVIDENCE, LLC
PMB 302 12042 S.E. SUNNYSIDE RD. CLACKAMAS, OR 97015
Phone & Fax: (503) 557-0314 Cell: (503) 631-2314
Web: Design-Providence.com Email: Design-Providence@Q.com

THESE PLANS HAVE BEEN LICENSED TO THE CUSTOMER FOR THE USE IN CONSTRUCTION OF ONE BUILDING ONLY & ARE SUBJECT TO THE ANY LIENS, CLAIMS OR LEGAL ACTIONS ARISING FROM ANY UNAUTHORIZED USE OF THE PLANS. ANY OTHER USE, REPRODUCTION OR DISTRIBUTION OF THE PLANS IS ILLEGAL WITHOUT THE EXPRESS WRITTEN CONSENT OF DESIGN PROVIDENCE, LLC. THE CONTRACTOR IS RESPONSIBLE FOR THE ACCURACY & SUITABILITY OF THE PLANS IN REGARD TO FITTING ON THE PROPERTY, SITE CONDITIONS, SETBACKS, EASEMENTS, ZONING REQUIREMENTS, ETC. ANY ADDITIONS OR ALTERATIONS MADE TO THE PLANS WITHOUT THE WRITTEN CONSENT OF DESIGN PROVIDENCE, LLC, WILL VOID THE ENTIRETY OF THE PLANS. THE CONTRACTOR & OWNER ARE RESPONSIBLE FOR ALL DIMENSIONS & CONDITIONS ON THE JOB SITE. ANY DISCREPANCIES FOUND MUST BE REPORTED TO DESIGN PROVIDENCE, LLC BEFORE WORK IS BEGUN. DO NOT SCALE THE DRAWINGS. ALL DIMENSIONS MUST BE VERIFIED CAREFULLY. INSPECT ALL DIMENSIONS & DETAILS IN THE PLANS FOR ACCURACY & SUITABILITY PRIOR TO BEGINNING CONSTRUCTION. DESIGN PROVIDENCE, LLC IS NOT RESPONSIBLE FOR ANY ERRORS OR OMISSIONS IN THE PLANS AFTER CONSTRUCTION HAS BEGUN. ALL DIMENSIONS MUST BE VERIFIED, AND WORK INTERRUPTED IMMEDIATELY IF ANY DISCREPANCIES ARE FOUND.

SHEET NR: S1

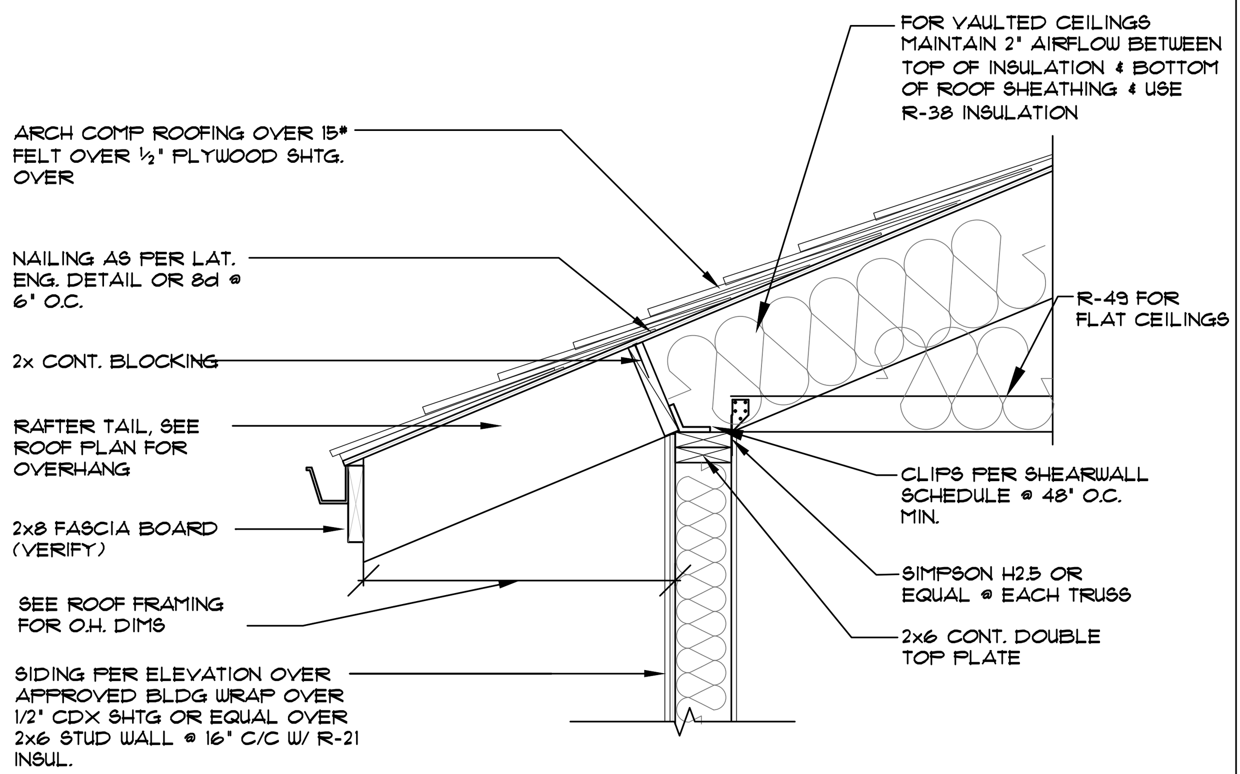

DET D1 | 1 DETAIL (TYP. EAVE)
SCALE: 3/4"=1'-0"

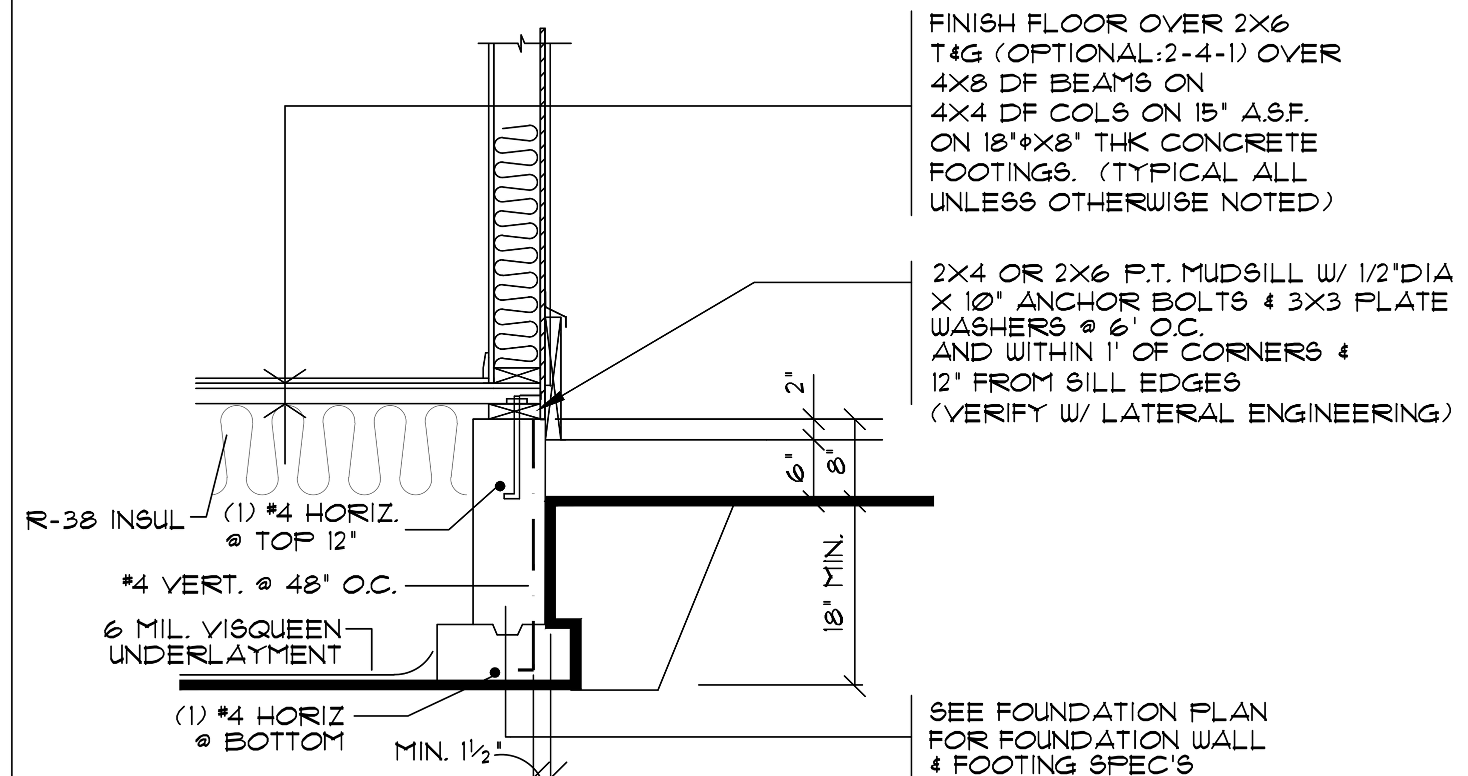

POST & BEAM FOOTING DETAIL

DET D1 | 2

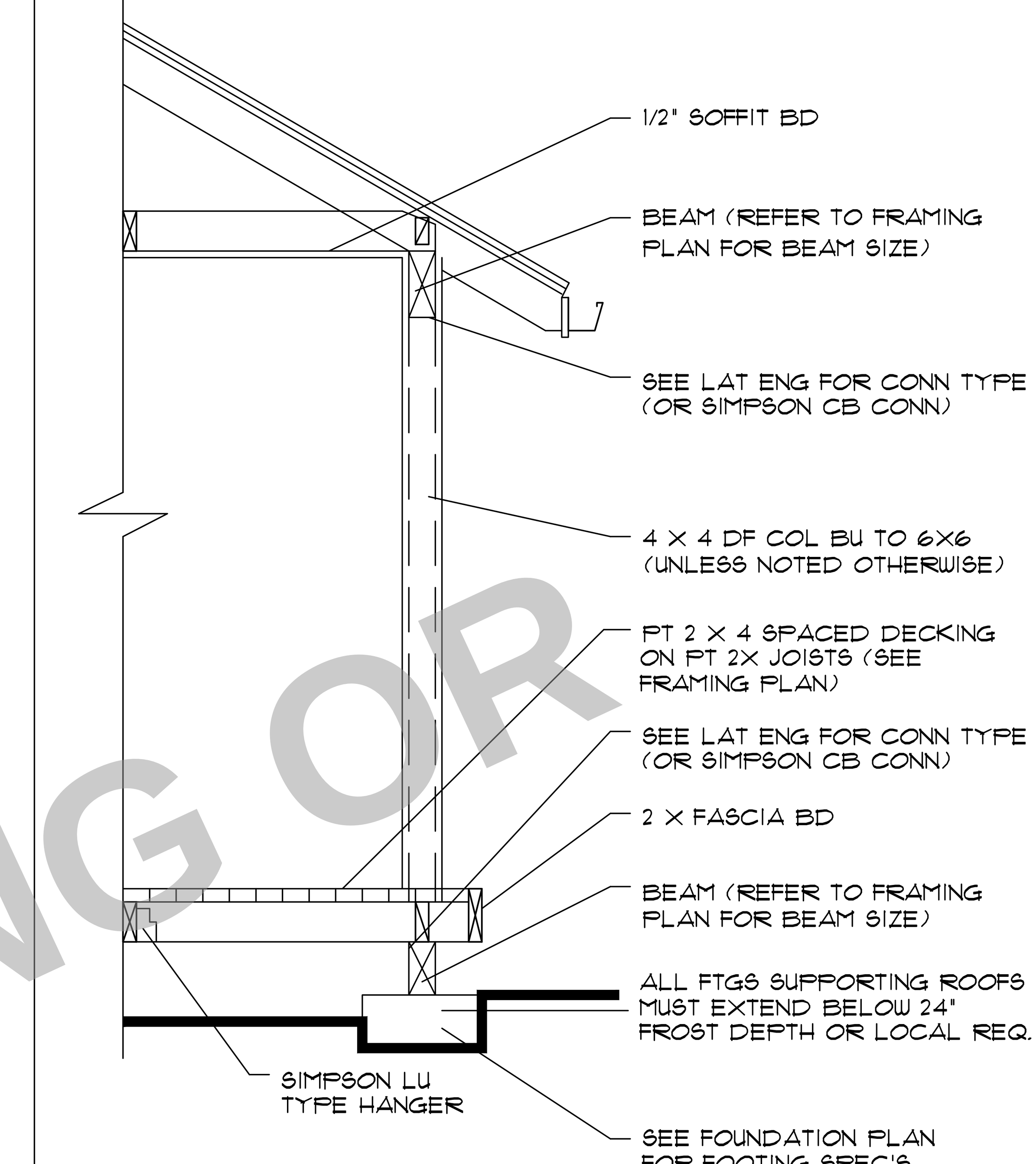

PORCH DETAIL

DET D1 | 5

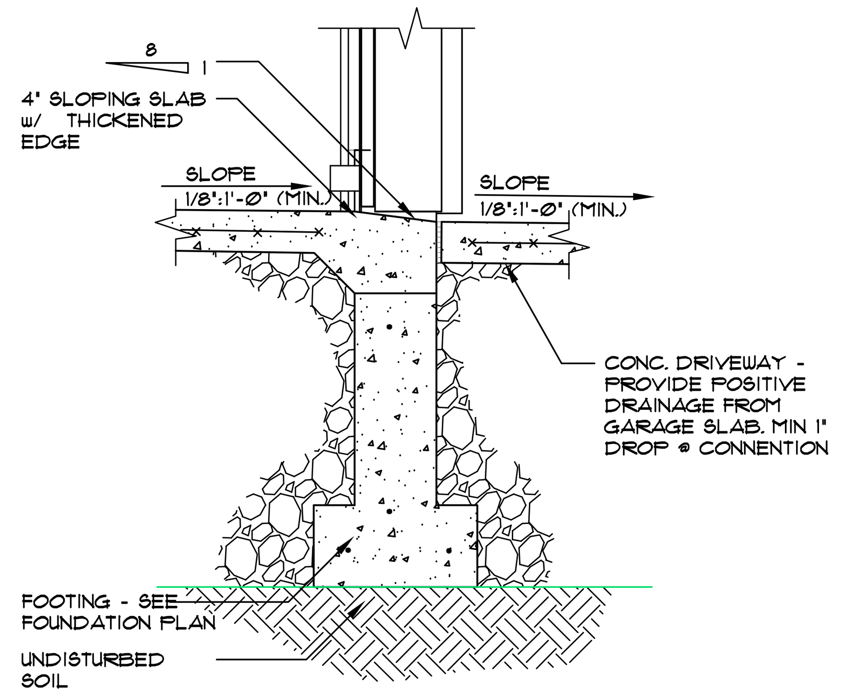

DET D1 | 3 DETAIL (GARAGE DOOR)
SCALE: 3/4"=1'-0"

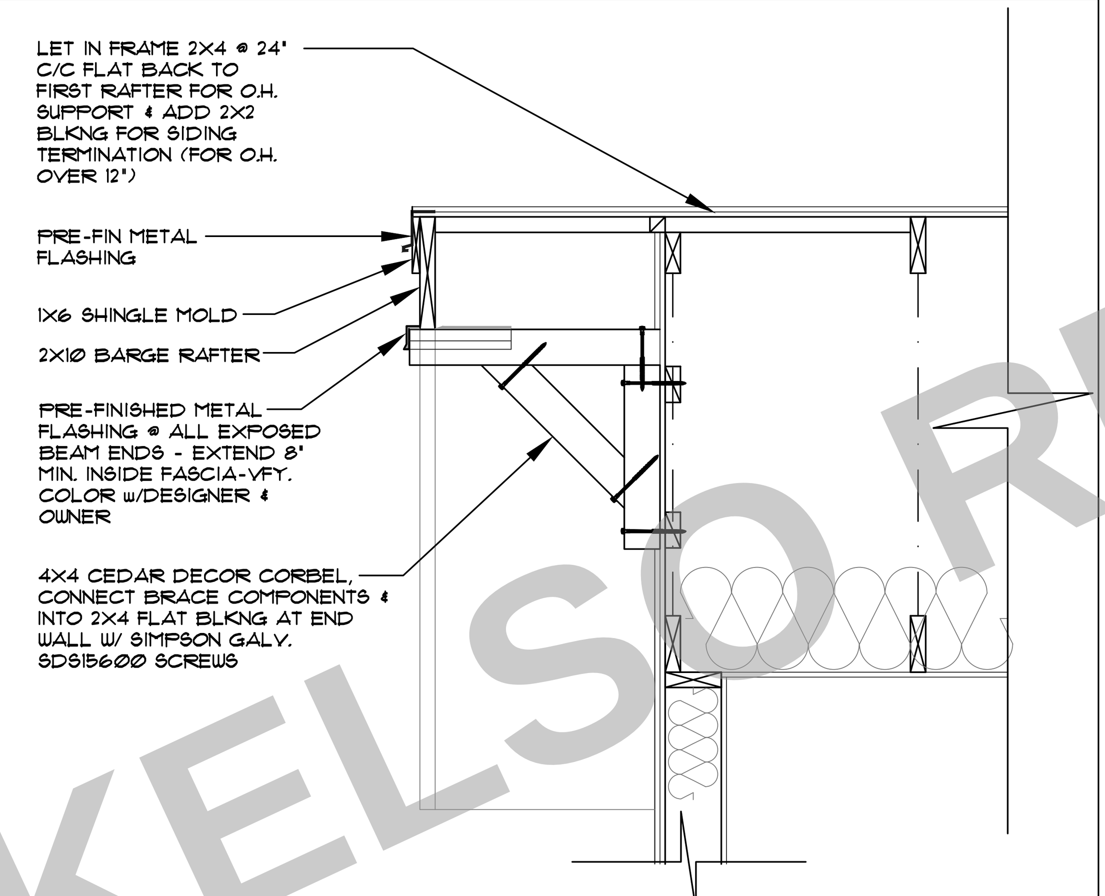

DET D1 | 8 DETAIL (DECORATIVE CORBEL & GABLE END)
SCALE: 3/4"=1'-0"

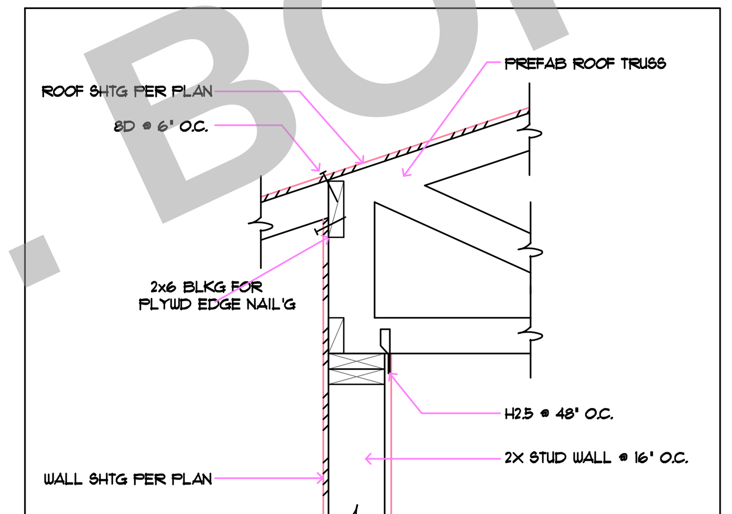

DET D1 | 7 ROOF TRUSS @ EXT WALL
RF T5 RAISED HEEL SCALE: 1" = 1'-0"

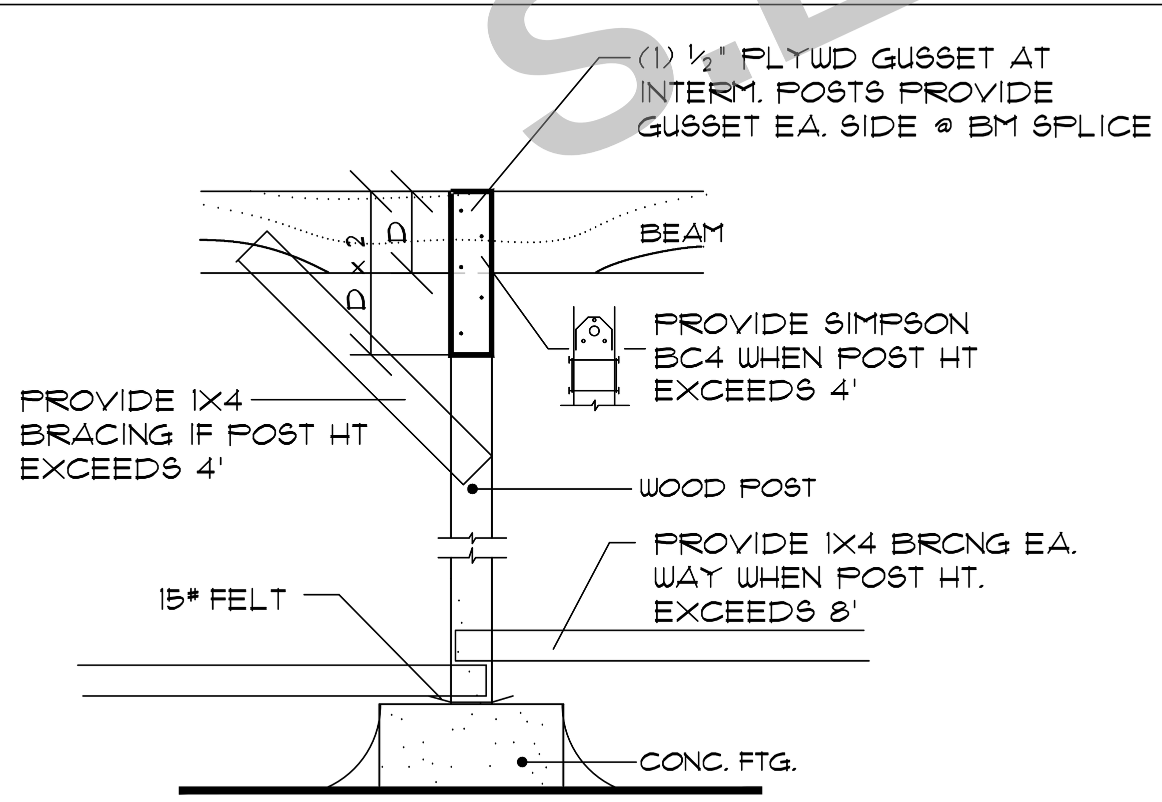

DET D1 | 6

POST & BEAM FOOTING DETAIL

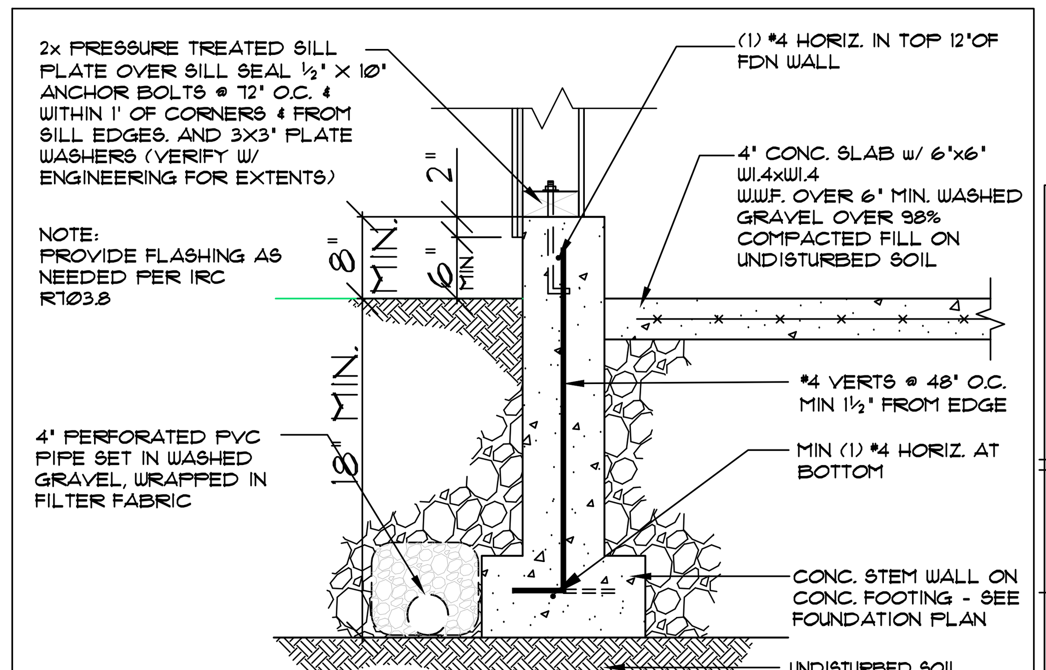

DET D1 | 4 DETAIL (GARAGE WALL)
SCALE: 3/4"=1'-0"

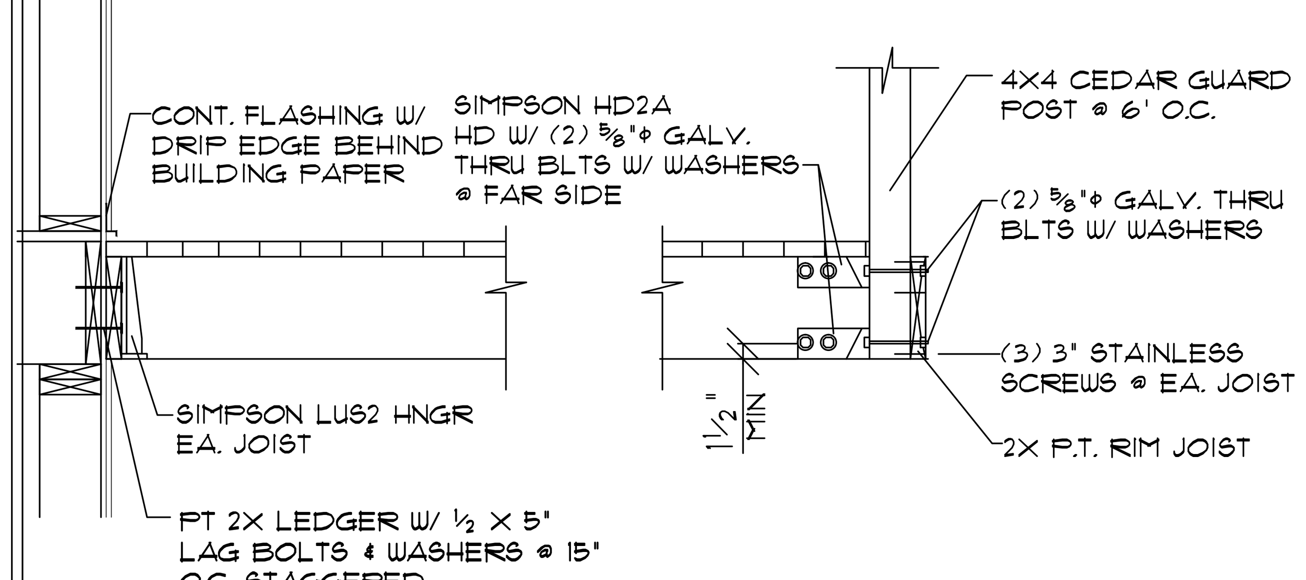

DET D1 | 10

DECK CONNECTION DETAILS

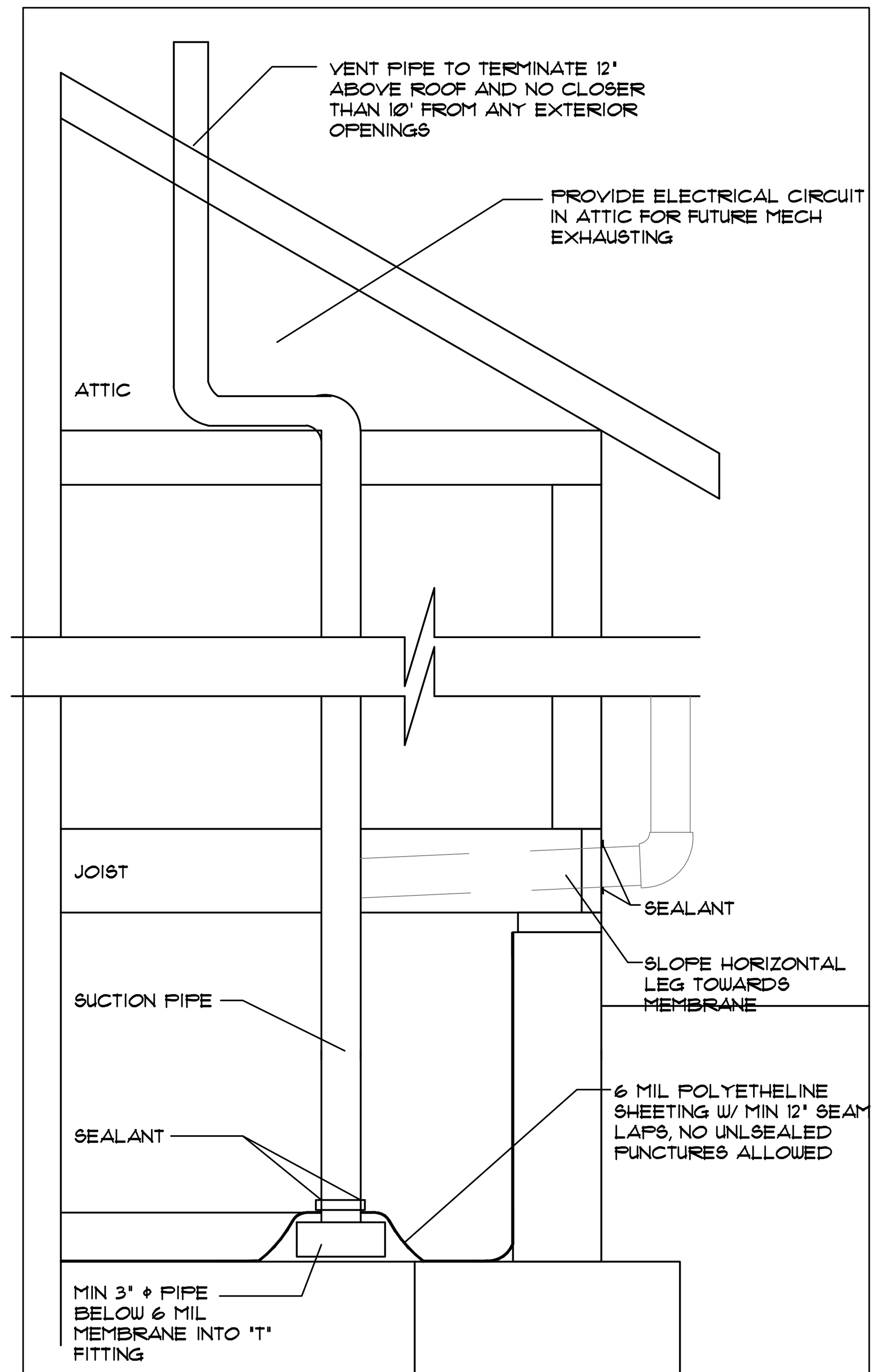

DET D1 | 9 DETAIL (PASSIVE RADON MITIGATION SYSTEM)
SCALE: 3/4"=1'-0"

S.E. KELSO RD. BORING OR

DRAW NO: 9312
DATE: 5-9-17
SCALE: 1/4" = 1'-0"

CLIENT NAME: THE HICKORY HAGGERTY REVISION
LOCATION
SHEET TITLE: TYPICAL DETAILS
SQUARE FEET:

DESIGN PROVIDENCE, LLC
PMB 362 12042 S.E. SUNNYSIDE RD. CLACKAMAS, OR 97015
Phone & Fax: 503-760-0446 Email: Designprovidence@Q.com
Web: DesignprovidenceLLC.com

SHEET NR:
D1

GENERAL NOTES

1. ALL WORK IS TO COMPLY WITH THE LATEST ADOPTED VERSION OF THE ORSC CODE AND ANY APPLICABLE STATE, COUNTY OR LOCAL REGULATIONS.
2. THE CONTRACTOR IS RESPONSIBLE TO CHECK THE PLANS AND IS TO NOTIFY THE DESIGNER OF ANY ERRORS OR OMISSIONS PRIOR TO THE START OF CONSTRUCTION.
3. WRITTEN DIMENSIONS HAVE PRECEDENCE OVER SCALED DIMENSIONS.
4. DESIGN LOADS:

ROOF	25 PSF (LIVE LOAD)
FLOOR	40 PSF (LIVE LOAD)
STAIRS	100 PSF
GARAGE FLOOR	125 PSF (2000# PT)
DECKS	75 PSF

(IF YOUR LOCAL AREA REQUIRES DIFFERENT DESIGN LOADS, CONSULT WITH A LOCAL STRUCTURAL ENGINEER TO DETERMINE THE APPROPRIATE REVISIONS.)

5. PROVIDE INSULATION BAFFLES AT EAVE VENTS BETWEEN RAFTERS.
6. ALL SMOKE DETECTORS SHALL BE POWERED BY 110V CURRENT, CONNECTED TO HOUSE ELECTRICAL SYSTEM. INTERCONNECT WITH EACH ONE SO THAT IF ANY ONE TRIPS THEY WILL ALL SOUND. THEY SHALL ALSO HAVE A BATTERY BACKUP AND BE LOCATED IN EACH BEDROOM AND ON EACH FLOOR LEVEL.
7. GUARDRAILS SHALL HAVE INTERMEDIATE RAILS SPACED SUCH THAT A SPHERE 4" IN DIA. CANNOT PASS THROUGH
8. PROVIDE GROUNDING ELECTRODE AT ELECTRICAL SERVICE CONSISTING OF A MINIMUM 20' LENGTH OF ½"φ STEEL REINFORCEMENT OF FOOTINGS. ELECTRODE SHALL EXTEND 12" MIN. ABOVE THE PLATE LINE.
9. THE MAXIMUM AMOUNT OF WATER USED BY NEW PLUMBING FIXTURES:

TOILETS	1.6 GALLONS/FLUSH
SHOWER HEADS	2.5 GALLONS/MINUTE
INTERIOR FAUCETS	2.5 GALLONS/MINUTE

10. IN THE EVENT OF CONFLICT BETWEEN PERTINENT CODES AND REGULATIONS AND REFERENCED STANDARDS OF THESE SPECIFICATIONS, THE MORE STRINGENT PROVISIONS SHALL GOVERN.
11. STRUCTURAL SPECIFICATONS AND DRAWINGS FOR THIS WORK HAVE BEEN PREPARED IN ACCORDANCE WITH GENERALLY ACCEPTED ENGINEERING PRACTICE TO MEET MINIMUM REQUIREMENTS OF THE LATEST EDITION OF THE ORSC.
12. SPECIFICATIONS AND DRAWINGS INDICATE FINISHED STRUCTURE. BUILDER SHALL BE RESPONSIBLE FOR CONSTRUCTION METHODS, PROCEDURES, AND CONDITIONS (INCLUDING SAFETY), EXCEPT AS SPECIFICALLY INDICATED OTHERWISE IN THE CONTRACT DOCUMENTS
13. CONSTRUCTION LOADS SHALL NOT OVERLOAD STRUCTURE NOR SHALL THEY BE IN EXCESS OF DESIGN LOADINGS INDICATED ON DRAWINGS.
14. BUILDER SHALL VERIFY ALL MATERIALS, DIMENSIONS, AND CONDITIONS SHOWN ON STRUCTURAL DRAWINGS OR NOTED IN STRUCTURAL SPECIFICATIONS. ANY VARIANCES WITHIN STRUCTURAL DRAWINGS AND SPECIFICATIONS, OR WITHIN CONDITIONS ENCOUNTERED AT JOB SITE, SHALL BE REPORTED TO OWNER IN WRITING BEFORE COMMENCEMENT OF ANY WORK EFFECTED BY SUCH VARIANCE.
15. BUILDER SHALL RIGIDLY ADHERE TO ALL LAWS, CODES, AND ORDINANCES WHICH APPLY TO THIS WORK. HE SHALL NOTIFY AND RECEIVE CLARIFICATION FROM OWNER IN WRITING OF ANY VARIATIONS BETWEEN CONTRACT DOCUMENTS AND GOVERNING REGULATIONS.
16. ALL MANUFACTURED MATERIALS, COMPONENTS, FASTENERS, ASSEMBLIES, ETC., SHALL BE HANDLED AND INSTALLED IN ACCORDANCE WITH MANUFACTURER'S INSTRUCTIONS AND PROVISIONS OF APPLICABLE ICBO RESEARCH RECOMMENDATIONS. WHERE SPECIFIC MANUFACTURED PRODUCTS ARE CALLED FOR, GENERIC EQUALS WHICH MEET APPLICABLE STANDARDS AND SPECIFICATONS MAY BE USED.
17. NO VARIANCE BY A BUILDING OFFICIAL SHALL BE BINDING ON DESIGNERS.
18. BUILDER SHALL INVESTIGATE SITE DURING CLEARING AND EARTHWORK OPERATIONS FOR FILLED EXCAVATIONS OR BURIED STRUCTURES SUCH AS CESS POOLS, CISTERNS, FOUNDATIONS, ETC. IF ANY SUCH ITEMS ARE FOUND, OWNER SHALL BE NOTIFIED IMMEDIATELY.

FLOOR PLAN NOTES

1. EACH BEDROOM TO HAVE A MINIMUM WINDOW OPENING OF 5.7 SQ FT WITH A MIN. WIDTH OF 20" AND A MIN. HEIGHT OF 22" AND A SILL LESS THAN 44" OFF THE FLOOR.
2. ALL WINDOWS WITHIN 18" OF THE FLOOR AND WITHIN 24" OF ANY DOOR ARE TO HAVE TEMPERED GLAZING. SEE SECTION R308.4 IN ORSC FOR ADDITIONAL INFO.
3. SKYLITES ARE TO BE GLAZED WITH TEMPERED GLASS ON OUTSIDE AND LAMINATED GLASS ON INSIDE (UNLESS PLEXIGLAS). GLASS TO HAVE MAXIMUM CLEAR SPAN OF 25". SKYLITE FRAME IS TO BE ATTACHED TO A 2 X CURB WITH MINIMUM OF 4" ABOVE ROOF PLANE.
4. ALL TUB OR SHOWER ENCLOSURES ARE TO BE GLAZED WITH SAFETY GLAZING.
5. ALL EXTERIOR WINDOWS ARE TO BE DOUBLE GLAZED AND ALL EXTERIOR DOORS ARE TO BE SOLID CORE WITH WEATHERSTRIPPING. PROVIDE 1/2" DEADBOLT LOCKS ON ALL EXTERIOR DOORS AND LOCKING DEVICES ON ALL DOORS OR WINDOWS WITHIN 10' (VERTICAL) OF GRADE. PROVIDE PEEP-HOLE @ 54" - 66" ABOVE FLOOR ON EXTERIOR DOORS.
6. PROVIDE COMBUSTION AIR VENTS (W/ SCREEN AND BACK DAMPER) FOR FIREPLACES, WOOD STOVES AND ANY APPLIANCES WITH AN OPEN FLAME.
7. BATHROOMS AND UTILITY ROOMS ARE TO BE VENTED TO THE OUTSIDE WITH A MINIMUM OF A 90 CFM FAN. RANGE HOODS ARE ALSO TO BE VENTED TO OUTSIDE.

INSULATION SPECIFICATIONS

1. ALL EXPOSED INSULATION IS TO HAVE A FLAME SPREAD RATING OF LESS THAN 25 & A SMOKE DENSITY RATING OF LESS THAN 450.
2. PERIMETER CONC. WALLS TO BE PROTECTED W/ RIGID FIBERBOARD INSULATION FROM TOP OF CONC WALL TO NOT LESS THAN 24" BELOW GRADE.
3. SLAB EDGE INSULATION IS TO BE R-15.
4. HEATING DUCTS TO BE INSULATED W/ R-8
5. WINDOWS SHALL MEET REQUIRED U FACTORS FOR THE CONTRACTORS CHOSEN PATH OF COMPLIANCE SEE TABLE N1104.1(1)
6. ONE EXTERIOR DOOR MAY BE INSULATED TO A U-FACTOR OF 0.20. ALL OTHER EXTERIOR DOORS MAY NOT EXCEED 0.54.

TABLE 602.3(1) FASTENER SCHEDULE FOR STRUCTURAL MEMBERS

DESCRIPTION OF BUILDING ELEMENTS	NO. & TYPE OF FASTENER [a,b,c,d]	SPACING OF FASTENERS
JOIST TO SILL OR GIRDER, TOE NAIL	3-8d	—
1" X 6" SUBFLOOR OR LESS TO EACH JOIST, FACE NAIL	2-8d 2 STAPLES, 1¾"	— —
2" SUBFLOOR TO JOIST OR GIRDER, BLIND AND FACE NAIL	2-16d	—
SOLE PLATE TO JOIST, SOLID DECK, OR BLOCKING , FACE NAIL	16d	16" O.C.
TOP OR SOLE PLATE TO STUD, END NAIL	2-16d	—
STUD TO SOLE PLATE, TOE NAIL	3-8d OR 2-16d	—
DOUBLE STUDS, FACE NAIL	10d	24" O.C.
DOUBLE TOP PLATES, FACE NAIL	10d	24" O.C.
SOLE PLATE TO JOIST, SOLID DECK, OR BLKG AT BRACED WALL PANELS	3-16d per 16"	—
DBL TOP PLATES, MIN. 48" OFFSET OF END JOINTS, FACE NAIL IN LAPPED AREA	8-16d	—
BLOCKING BETWEEN JOISTS OR RAFTERS TO TOP PLATE, TOE NAIL	3-8d	—
RIM JOIST TO TOP PLATE, TOE NAIL	8d	6" O.C.
TOP PLATES, LAPS AT CORNERS AND INTERSECTIONS, FACE NAIL	2-10d	—
BUILT-UP HEADER, TWO PIECES WITH ½" SPACER	16d	16" O.C. ALONG EA EDGE
CONTINUED HEADER, TWO PIECES	16d	16" O.C. ALONG EA EDGE
CIELING JOISTS TO PLATE, TOE NAIL	3-8d	—
CONTINUOUS HEADER TO STUD, TOE NAIL	4-8d	—
CEILING JOIST, LAPS OVER PARTITIONS, FACE NAIL	3-10d	—
CEILING JOIST TO PARALLEL RAFTERS, FACE NAIL	3-10d	—
RAFTER TO PLATE, TOE NAIL	2-16d	—
1" BRACE TO EACH STUD AND PLATE, FACE NAIL	2-8d 2 STAPLES, 1¾"	— —
BUILT-UP CORNER STUDS	10d	24" O.C.
BUILT-UP GIRDERS AND BEAMS, 2-INCH LUMBER LAYERS	10d	NAIL EACH LAYER AS FOLLOWS: 32" O.C. @ TOP & BOTTOM, STAGGERED TWO NAILS AT ENDS AND AT EACH SPLICE.
2" PLANKS	2-16d	AT EACH BEARING
ROOF RAFTERS TO RIDGE, VALLEY OR HIP RAFTERS:		
TOE NAIL	4-16d	—
FACE NAIL	3-16d	—
RAFTER TIES TO RAFTERS, FACE	3-8d	—

DESCRIPTION OF BUILDING MATERIALS	DESCRIPTION OF FASTENER [b,c,d,e]	SPACING OF FASTENERS	
		EDGES (IN.)[i]	INTERMEDIATE SUPPORTS [c,e] (IN.)
PLYWOOD AND WOOD STRUCTURAL PANELS, SUBFLOOR, ROOF AND WALL SHEATHING TO FRAMING, AND PARTICLEBOARD WALL SHEATHING TO FRAMING			
5/16"-1/2"	6d COMMON NAIL (SUBFLOOR, WALL) 8d COMMON NAIL (ROOF)	6	12[g]
19/32"-1"	8d COMMON NAIL	6	12[g]
1 1/8"-1 1/4"	10d COM NAIL OR 8d DEFRMD NAIL	6	12
OTHER WALL SHEATHING[h]			
1/2" REGULAR CELLULOSIC FIBERBOARD SHEATHING	1½" GALVANIZED ROOFING NAIL, 6d COM NAIL, STAPLE 16 GA., 1½" LONG	3	6
1/2" STRUCTURAL CELLULOSIC FIBERBOARD SHEATHING	1½" GALVANIZED ROOFING NAIL, 8d COM NAIL, STAPLE 16 GA., 1½" LONG	3	6
25/32" STRUCTURAL CELLULOSIC FIBERBOARD SHEATHING	1¾" GALVANIZED ROOFING NAIL, 8d COM NAIL, STAPLE 16 GA., 1¾" LONG	3	6
1/2" GYPSUM SHEATHING	1½" GALVANIZED ROOFING NAIL, 6d COM NAIL, STAPLE GALVANIZED, 1½" LONG, 1¼" SCREWS, TYPE W OR S	4	8
5/8" GYPSUM SHEATHING	1¾" GALVANIZED ROOFING NAIL, 8d COM NAIL, STAPLE GALVANIZED, 1⅝" LONG, 1⅝" SCREWS, TYPE W OR S	4	8
PLYWOOD AND WOOD STRUCTURAL PANELS, COMBINATION SUBFLOOR UNDERLAYMENT TO FRAMING			
3/4" AND LESS	6d DEFORMED NAIL OR 8d COM NAIL	6	12
7/8"-1"	8d COM NAIL OR 8d DEFORMED NAIL	6	12
1 1/8"-1 1/4"	10d COM NAIL OR 8d DEFORMED NAIL	6	12

FOR SI: 1 INCH = 25.4 MM, 1 FOOT = 304.8 MM, 1 MPH = 1.609 KM/H.

a. ALL NAILS ARE SMOOTH-COMMON, BOX OR DEFORMED SHANKS EXCEPT WHERE OTHERWISE STATED. NAILS USED FOR FRAMING ANS SHEATHING CONNECTIONS SHALL HAVE MINIMUM AVERAGE BENDING YIELD STRENGTHS AS SHOWN: 80 ksi (551 MPa) FOR SHANK DIAMETER OF 0.192" (20d COMMON NAIL), 90 ksi (620 MPa) FOR SHANK DIAMETERS LARGER THAN 0.142" BUT NOT LARGER THAN 0.177", AND 100 ksi (689 MPa) FOR SHANK DIAMETERS OF 0.142" OR LESS.
b. STAPLES ARE 16 GUAGE WIRE AND HAVE A MINIMUM 7/16-INCH O.D. CROWN WIDTH.
c. NAILS SHALL BE SPACED AT NOT MORE THAN 6 INCHES O.C. AT ALL SUPPORTS WHERE SPANS ARE 48 INCHES OR GREATER.
d. FOUR-FOOT-BY-8-FOOT OR 4-FOOT-BY-9-FOOT PANELS SHALL BE APPLIED VERTICALLY.
e. SPACING OF FASTENERS NOT INCLUDED IN THIS TABLE SHALL BE BASED ON TABLE 602.3(2).
f. FOR REGIONS HAVING BASIC WIND SPEED OF 110 MPH OR GREATER, 8d DEFORMED NAILS SHALL BE USED FOR ATTACHING PLYWOOD AND WOOD STRUCTURAL PANEL ROOF SHEATHING TO FRAMING WITHIN MINIMUM 48-INCH DISTANCE FROM GABLE END WALLS, IF MEAN ROOF HEIGHT IS MORE THAN 25', UP TO 35' MAXIMUM.
g. FOR REGIONS HAVING BASIC WIND SPEED OF LESS THAN 110 MPH, NAILS FOR ATTACHING WOOD STRUCTURAL PANEL ROOF SHEATHING TO GABLE END WALL FRAMING SHALL BE SPACED 6" O.C. WHEN BASIC WIND SPEED IS GREATER THAN 100 MPH, NAILS FOR ATTACHING PANEL ROOF SHEATHING TO INTERMEDIATE SUPPORTS SHALL BE SPACED 6" O.C. FOR MINIMUM 48" DISTANCE FROM RIDGES, EAVES AND GABLE END WALLS, AND 4" O.C. TO GABLE END WALL FRAMING.
h. GYPSUM SHEATHING SHALL CONFORM TO ASTM C 79 AND SHALL BE INSTALLED IN ACCORDANCE WITH GA 253. FIBERBOARD SHEATHING SHALL CONFORM TO EITHER AHA 194.1 OR ASTM C 208.
i. SPACING OF FASTENERS ON FLOOR SHEATHING PANEL EDGES APPLIES TO PANEL EDGES SUPPORTED BY FRAMING MEMBERS AND AT ALL ROOF PLANE PERIMETERS ONLY. SPACING OF FASTENERES ON ROOF SHEATHING PANEL EDGES APPLIES TO PANEL EDGES SUPPORTED BY FRAMING MEMBERS AND AT ALL ROOF PLANE PERIMETERS. BLOCKING OF ROOF OR FLOOR SHEATHING PANEL EDGES PERPENDICULAR TO THE FRAMING MEMBERS SHALL NOT BE REQUIRED EXCEPT AT INTERSECTION OF ADJACENT ROOF PLANES. FLOOR AND ROOF PERIMETER SHALL BE SUPPORTED BY FRAMING MEMBERS OR SOLID BLOCKING.
j. INTERIOR NON-BRACED WALL LINES MAY BE NAILED WITH A MINIMUM 4-10d NAILS.

FRAMING NOTES

1. ALL EXTERIOR WALL AND BEARING WALL OPENINGS TO HAVE 4X12 HEADERS UNLESS OTHERWISE INDICATED
2. JOISTS THAT ARE ATTACHED TO FLUSH BEAMS ARE TO BE HUNG WITH "SIMPSON" LU TYPE OR EQUIV.

2b. DOUBLE JOISTS THAT ARE ATTACHED TO FLUSH BMS ARE TO BE HUNG WITH "SIMPSON" LUS TYPE OR EQUIV.

3. PROVIDE DOUBLE JOISTS UNDER ALL PARALLEL PARTITIONS OVER.
4. PROVIDE FIREBLOCKING, DRAFTSTOPS & FIRESTOPS AS PER THE ORSC SEC R602.8
5. LUMBER SPECIES:

A. POSTS, BEAMS, HEADERS JOISTS AND RAFTERS	NO.2 DOUG FIR
B. SILLS, PLATES, BLOCKING BRIDGING, ETC.	NO.3 DOUG FIR
C. STUDS	STUD GRADE D.F.
D. POST AND BEAM DECKING	UTILITY GRADE D.F.
E. PLYWOOD SHEATHING	1/2" CDX PLY, 32/16
F. GLU-LAM BEAMS	fb-2400, DRY ADH.

6. NAILING SCHEDULE SEE TABLE 602.3(1)
7. NOTCHES IN SOLID LUMBER JOISTS, RAFTERS, AND BEAMS SHALL NOT EXCEED ONE-SIXTH OF THE DEPTH OF THE MEMBER, SHALL NOT BE LONGER THAN ONE-THIRD OF THE DEPTH OF THE MEMBER AND SHALL NOT BE LOCATED IN THE MIDDLE ONE-THIRD OF THE SPAN. NOTCHES AT THE ENDS OF THE MEMBER SHALL NOT EXCEED ONE-FOURTH THE DEPTH OF THE MEMBER. THE TENSION SIDE OF MEMBERS 4" (102mm) OR GREATER IN NOMINAL THICKNESS SHALL NOT BE NOTCHED EXCEPT AT ENDS OF THE MEMBERS. THE DIAMETER OF HOLES BORED OR CUT INTO MEMBERS SHALL NOT EXCEED ONE-THIRD THE DEPTH OF THE MEMBER. HOLES SHALL NOT BE CLOSER THAN 2" TO THE TOP OR BOTTOM OF THE MEMBER, OR TO ANY OTHER HOLE LOCATED IN THE MEMBER. WHERE THE MEMBER IS ALSO NOTCHED, THE HOLE SHALL NOT BE CLOSER THAN 2" (51mm) TO THE NOTCH.
8. STUDS IN AN EXTERIOR WALL OR LOAD-BEARING PARTITIONS SHALL BE PERMITTED TO BE CUT OR NOTCHED TO A DEPTH NOT EXCEEDING 25% OF ITS WIDTH. STUDS IN NON-LOAD-BEARING PARTITIONS SHALL BE PERMITTED TO BE NOTCHED TO A DEPTH NOT TO EXCEED 40% OF A SINGLE STUD WIDTH. STUDS SHALL BE PERMITTED TO BE BORED OR DRILLED, PROVIDED THAT THE DIAMETER OF THE RESULTING HOLE IS NO GREATER THAN 40% OF THE STUD WIDTH, THE EDGE OF THE HOLE IS NO CLOSER THAN 5/8" (15.9mm) TO THE EDGE OF THE STUD, AND THE HOLE IS NOT LOCATED IN THE SAME SECTION AS A CUT OR NOTCH.
9. INSTALL ALL HORIZONTAL MEMBERS WITH CROWN UP.
10. ALL MEMBERS IN BEARING SHALL BE ACCURATELY CUT AND ALIGNED SO THAT FULL BEARING IS PROVIDED WITHOUT USE OF SHIMS. BEARING POSTS SHALL HAVE FULL BLOCKING OR SUPPORT UNDER.
11. ALL JOISTS SHALL HAVE A MINIMUM OF 2" BEARING AT SUPPORTS. LAPPING JOISTS SHALL HAVE 6" LAPS CENTERED OVER INTERIOR SUPPORTS.
12. LEDGERS AND STUD WALL FOUNDATION SILL PLATES SHALL BE BOLTED TO CONCRETE W/ ANCHOR BOLTS OF SIZE AND MINIMUM SPACING AS SHOWN ON DRAWINGS. AT LEAST TWO BOLTS SHALL BE PROVIDED FOR EACH PIECE W/ ONE BOLT WITHIN 12" OF EACH END.
13. ALL PLYWOOD WALL SHEATHING SHALL BE APPLIED AS FOLLOWS: CENTER VERTICAL JOINTS OVER STUDS AND CENTER HORIZONTAL JOINT OVER 2" BLOCKING OR PLATE. NAIL TOP OF PANELS TO DOUBLE TOP PLATE, AND NAIL BOTTOM OF PANELS TO ANCHORED SILL PLATE. APPLY GYPSUM BOARD SO THAT END JOINTS OF ADJACENT COURSE DO NOT OCCUR AT THE SAME STUD.

FOUNDATION NOTES

1. FOOTINGS ARE TO BEAR ON UNDISTURBED LEVEL SOIL DEVOID OF ANY ORGANIC MATERIAL AND STEPPED AS REQUIRED TO MAINTAIN THE REQUIRED DEPTH BELOW THE FINAL GRADE.
2. SOIL BEARING PRESSURE ASSUMED TO BE 1500 PSF.
3. ANY FILL UNDER GRADE SUPPORTED SLABS TO BE A MINIMUM OF 4" GRANULAR MATERIAL COMPACTED TO 95%.
4. CONCRETE TO DEVELOP A MIN. OF 3000 PSI AT 28 DAYS WITH A MIN. OF 6 SACKS OF CEMENT PER YARD AND A MAXIMUM SLUMP OF 4".
5. CONCRETE SLABS TO HAVE CONTROL JOINTS AT 25' (MAXIMUM) INTERVALS EA. WAY.
6. CONCRETE SIDEWALKS TO HAVE 3/4" TOOLED JOINTS AT 5' O.C. (MINIMUM)
7. REINFORCING STEEL TO BE A-615 GRADE 40. WELDED WIRE MESH TO BE A-185.
8. EXCAVATE THE SITE TO PROVIDE A MINIMUM OF 18" CLEARANCE UNDER ALL GIRDERS.
9. COVER ENTIRE CRAWLSPACE WITH 6 MIL BLACK "VISQUEEN" AND EXTEND UP FDTN. WALLS TO P.T. MUDSILL.
10. PROVIDE A MINIMUM OF 1 SQ FT OF VENTILATION AREA FOR EACH 150 SQ FT OF CRAWLSPACE AREA. VENTS ARE TO BE CLOSABLE WITH 1/4" OPENINGS IN CORROSIVE RESISTANT SCREEN.
11. ALL WOOD IN CONTACT WITH CONCRETE TO BE PRESSURE TREATED OR PROTECTED WITH 30# ROLL ROOFING.
12. BEAM POCKETS IN CONCRETE TO HAVE 1/2" AIRSPACE AT SIDES AND ENDS WITH A MINIMUM BEARING OF 3".
13. PROVIDE CRAWLSPACE DRAIN AS PER SEC. R405.1 OF ORSC
14. THE GRADE AWAY FROM FND WALLS SHALL FALL 6" MIN. WITHIN FIRST 10'.
15. SLOPE FOR PERMANENT FILLS AND CUT SLOPES SHALL NOT EXCEED 2 UNITS HORIZ. TO 1 UNIT VERT.
16. BACKFILL SHALL NOT BE PLACED UNTIL WALL HAS SUFFICIENT STRENGTH AND HAS BEEN ANCHORED TO FLOOR ABOVE ON WALLS W/ MORE THAN 4' UNBALANCED BACKFILL.
17. BUILDER SHALL BE RESPONSIBLE FOR SUPPORT OF ALL TEMPORARY EMBANKMENTS AND EXCAVATIONS.
18. FOOTINGS SHALL BE FOUNDED ON FIRM, UNDISTURBED, NATIVE, FREE DRAINING SOILS. CONDITIONS FOUND TO BE OTHERWISE SHALL BE REPORTED TO OWNER.
19. ALL GROUND OVER WHICH FOOTINGS AND SLABS-ON-GRADE ARE TO BE PLACED SHALL BE FREE OF EXPANSIVE OR COMPRESSIBLE DEBRIS AND ORGANIC MATERIAL.
20. FOOTINGS AND SLABS-ON-GRADE CONCRETE SHALL NOT BE PLACED ON MUDDY OR FROZEN GROUND. SUB-GRADE FOR SLABS-ON-GRADE WHERE VAPOR BARRIER IS NOT REQUIRED SHALL BE DAMP AT TIME OF CONCRETE PLACEMENT.

ELECTRICAL REQUIREMENTS*

LIGHTING REQUIREMENTS:
AT LEAST ONE WALL SWITCH-CONTROLLED LIGHTING OUTLET SHALL BE INSTALLED IN EVERY HABITABLE ROOM AND IN BATHROOMS, HALLWAYS, STAIRWAYS, ATTACHED GARAGES, DETACHED GARAGES PROVIDED WITH ELECTRICAL POWER AND AT THE EXTERIOR SIDE OF EGRESS DOORS.

STAIRWAY LIGHTING CONTROL:
ALL INTERIOR AND EXTERIOR STAIRWAYS SHALL BE PROVIDED WITH A MEANS OF ILLUMINATION TO THE STAIR, INCLUDING THE LANDINGS AND TREADS, TO BE CONTROLLED BY A WALL SWITCH AT EACH FLOOR LEVEL. INTERIOR STAIRS SHALL BE PROVIDED WITH AN ARTIFICIAL LIGHT SOURCE LOCATED IN THE IMMEDIATE VICINITY OF EACH LANDING AT THE TOP AND BOTTOM OF THE STAIR. EXTERIOR STAIRS SHALL BE PROVIDED WITH AN ARTIFICIAL LIGHT SOURCE LOCATED IN THE IMMEDIATE VICINITY OF THE TOP LANDING OF THE STAIR. EXCEPTION: WHERE THE DIFFERENCE BETWEEN FLOOR LEVELS REQUIRES LESS THAN 6 STAIR RISERS.

FIXTURES IN CLOTHES CLOSETS:
SURFACE MOUNTED FLUORESCENT FIXTURES SHALL BE INSTALLED ON THE WALL ABOVE THE DOOR OR ON THE CEILING, PROVIDED THERE IS A MINIMUM CLEARANCE OF 6" BETWEEN THE FIXTURE AND THE NEAREST POINT OF A STORAGE SPACE.

WET OR DAMP LOCATIONS:
FIXTURES INSTALLED IN WET OR DAMP LOCATIONS SHALL BE INSTALLED SO THAT WATER CANNOT ENTER OR ACCUMULATE IN WIRING COMPARTMENTS, LAMPHOLDERS OR OTHER ELECTRICAL PARTS. ALL FIXTURES INSTALLED IN WET LOCATIONS SHALL BE MARKED "SUITABLE FOR WET LOCATIONS". ALL FIXTURES INSTALLED IN DAMP LOCATIONS SHALL BE MARKED "SUITABLE FOR WET LOCATIONS" OR "SUITABLE FOR DAMP LOCATIONS"

LIGHT SWITCH ACCESS:
ALL SWITCHES SHALL BE LOCATED TO ALLOW OPERATION FROM A READILY ACCESSIBLE LOCATION.

RECEPTACLE OUTLET REQUIREMENTS:
IN EVERY KITCHEN, FAMILY ROOM, DINING ROOM, LIVING ROOM, DEN, BEDROOM, OR SIMILAR ROOM OR AREA OF DWELLING UNITS, RECEPTACLE OUTLETS SHALL BE INSTALLED SO THAT NO POINT ALONG THE FLOOR LINE IN ANY WALL SPACE IS MORE THAN 6 FEET, MEASURED HORIZONTALLY FROM AN OUTLET IN THAT SPACE, INCLUDING ANY WALL SPACE THAT IS 2 FEET OR MORE IN WIDTH.

KITCHENS:
RECEPTACLE OUTLETS, WITH GFI PROTECTION, SHALL BE INSTALLED EVERY 24" ON ALL COUNTER SPACES THAT MEASURE 12" OR WIDER

BATHROOMS:
AT LEAST ONE WALL RECEPTACLE OUTLET, WITH GFI PROTECTION, SHALL BE INSTALLED IN BATHROOMS ADJACENT TO EACH BASIN LOCATION.

OUTDOORS:
AT LEAST ONE RECEPTACLE OUTLET, WITH GFI PROTECTION, SHALL BE INSTALLED OUTDOORS AT THE FRONT AND BACK OF EACH DWELLING UNIT HAVING DIRECT ACCESS TO GRADE.

HALLWAYS:
HALLWAYS OF 10 FEET OR MORE IN LENGTH SHALL HAVE AT LEAST ONE RECEPTACLE OUTLET.

HVAC OUTLET:
A CONVENIENCE RECEPTACLE OUTLET SHALL BE INSTALLED FOR THE SERVICING OF HEATING, AIR-CONDITIONING AND REFRIGERATION EQUIPMENT LOCATED IN ATTICS AND CRAWL SPACES.

WET LOCATIONS:
A RECEPTACLE INSTALLED IN A WET LOCATION SHALL BE IN A WEATHER PROOF ENCLOSURE, THE INTEGRITY OF WHICH IS NOT AFFECTED WHEN THE ATTACHMENT PLUG CAP IS INSERTED.

*ADDITIONAL INFORMATION CAN BE FOUND IN THE OREGON RESIDENTIAL SPECIALTY CODE BOOK IN SECTIONS:

E37-404 SWITCHES
E37-406 RECEPTACLE OUTLETS
E37-410 LIGHTING OUTLETS

ABRIDGED TABLE N1101.1(1)

BUILDING COMPONENTS	REQUIRED VALUE
WALL INSULATION ABOVE GRADE	R = 21[c]
WALL INSULATION BELOW GRADE[e]	R = 15
FLAT CEILINGS[f]	R = 49
VAULTED CEILINGS[g]	R = 38[g]
UNDERFLOOR INSULATION	R = 38
SLAB FLOOR EDGE INSULATION	R = 15
HEATED SLAB FLOOR INTERIORS[i]	R = 10
WINDOW CLASS	U = 0.35
SKYLIGHT CLASS[i]	U = 0.60
EXT. DOORS[m]	U = 0.20
EXT. DOORS W/<2.5 SQ. FT. GLAZING[n]	U = 0.40
FORCED AIR DUCT INSULATION	R - 8

ADDITIONAL NOTES

a. As allowed in Section 404.1, thermal performance of a component may be adjusted provided that overall heat loss does not exceed the total resulting from conformance to the required U-value standards. Calculations to document equivalent heat loss shall be performed using the procedure and approved U-values contained in Table 404.1(1).

b. R-values used in this table are nominal, for the insulation only in standard wood frameed construction and not for the entire assembly.

c. Wall insulation requirements apply to all exterior wood framed, concrete or masonry walls that are above grade. This includes cripple walls and rim joist areas. R-19 advanced Frame or 2x4 wall with rigid inulation may be substituted if total nominal insulation R-value is 18.5 or greater.

e. Below-grade wood, concrete or masonry walls include all walls that are below grade and do not include those portions of such walls that extend more than 24 inches above grade.

f. Insulation levels for ceilings that have limited attic/rafter depth such as dormers, bay windows or similar featrues totaling not more than 150 squaur feet in area may be reduced to not less than R-21. when reduced, the cavity shall be filled (except for required vent spaces)

g. The maximum vaulted ceiling surface area shall not be greater than 50 percent of the total heated space floor area unless area has a U-factor no greater than U-0.031. The U-factor of 0.042 is representative of a vaulted scissor truss. A 10-inch (254 mm) deep rafter vaulted ceiling with R-30 insulation is U-0.033 and complies with this requirement, not to exceed 50 percent of the total heated space floor area

j. Sliding glass doors shall comply with window performance requirements.

k. Reduced area may not be used as a trade off criterion for thermal performance of any component.

m. A maximum of 28 square feet of exterior door area per dwelling unit can have a U-factor of .54 or less.

n. Glazing that is either double pane with low-e coating on one surface, or triple pane shall be deemed to comply with this u-.40 requirement.

TABLE N1101.1(2)
ADDITIONAL MEASURES

Envelope Enhancement Measure (Select One)	1	**High efficiency walls & windows:** Exterior walls—U-0.047/R-19+5 (insulation sheathing)/SIPS, and one of the following options: Windows—Max 15 percent of conditioned area; or Windows—U-0.30
	2	**High efficiency envelope:** Exterior walls—U-0.058/R-21 Intermediate framing, and Vaulted ceilings—U-0.033/R-30A[d,e], and Flat ceilings—U-0.025/R-49, and Framed floors—U-0.025/R-38, and Windows—U-0.30; and Doors—All doors U-0.20, or Additional 15 percent of permanently installed lighting fixtures as high-efficacy lamps or Conservation Measure D and E
	3	**High efficiency ceiling, windows & duct sealing:** (Cannot be used with Conservation Measure E) Vaulted ceilings—U-0.033/R-30A[d,e], and Flat ceilings—U-0.025/R-49, and Windows—U-0.30, and Performance tested duct systems[b]
	4	**High efficiency thermal envelope UA:** Proposed UA is 15% lower than the Code UA when calculated in Table N1104.1(1)
	5	**Building tightness testing, ventilation & duct sealing:** A mechanical exhaust, supply, or combination system providing whole-building ventilation rates specified in Table N1101.1(3), or ASHRAE 62.2, and The dwelling shall be tested with a blower door and found to exhibit no more than: 1. 6.0 air changes per hour[f], or 2. 5.0 air changes per hour[f] when used with Conservation Measure E, and Performance tested duct systems[b]
	6	**Ducted HVAC systems within conditioned space:** (Cannot be used with Conservation Measure B or C) All ducts and air handler are contained within building envelope[j]
Conservation Measure (Select One)	A	**High efficiency HVAC system:** Gas-fired furnace or boiler with minimum AFUE of 90% a, or Air-source heat pump with minimum HSPF of 8.5 or Closed-loop ground source heat pump with minimum COP of 3.0
	B	**Ducted HVAC systems within conditioned space:** All ducts and air handler are contained within building envelope[j]
	C	**Ductless heat pump:** Replace electric resistance heating in at least the primary zone of dwelling with at least one ductless mini-split heat pump having a minimum HSPF of 8.5. Unit shall not have integrated backup resistance heat, and the unit (or units, if more than one is installed in the dwelling) shall be sized to have capacity to meet the entire dwelling design heat loss rate at outdoor design temperature condition. Conventional electric resistance heating may be provided for any secondary zones in the dwelling. A packaged terminal heat pump (PTHP) with comparable efficiency ratings may be used when no supplemental zonal heaters are installed in the building and integrated backup resistant heat is allowed in a PTHP
	D	**High efficiency water heating & lighting:** Natural gas/propane, on-demand water heating with min EF of 0.80, and A minimum 75 percent of permanently installed lighting fixtures as CFL or linear fluorescent or a min efficacy of 40 lumens per watt as specified in Section N1107.2[c]
	E	**Energy management device & duct sealing:** Whole building energy management device that is capable of monitoring or controlling energy consumption, and Performance tested duct systems[b], and A minimum 75 percent of permanently installed lighting fixtures as high-efficacy lamps
	F	**Solar photovoltaic:** Minimum 1 watt/sq ft conditioned floor space[g]
	G	**Solar water heating:** Minimum of 40 ft² of gross collector area[h]

For SI: 1 square foot = 0.093 m², 1 watt per square foot = 10.8 W/m².
a. Furnaces located within the building envelope shall have sealed combustion air installed. Combustion air shall be ducted directly from the outdoors.
b. Documentation of Performance Tested Ductwork shall be submitted to the building official upon completion of work. This work shall be performed by a contractor certified by the Oregon Department of Energy's (ODOE) Residential Energy Tax Credit program and documentation shall be provided that work demonstrates conformance to ODOE duct performance standards.
c. Section N1107.2 requires 50 percent of permanently installed lighting fixtures to contain high efficacy lamps. Each of these additional measures adds an additional percent to the Section N1107.2 requirement.
d. A = advanced frame construction, which shall provide full required ceiling insulation value to the outside of exterior walls.
e. The maximum vaulted ceiling surface area shall not be greater than 50 percent of the total heated space floor area unless vaulted area has a U-factor no greater than U-0.026.
f. Building tightness test shall be conducted with a blower door depressurizing the dwelling 50 Pascal's from ambient conditions. Documentation of blower door test shall be submitted to the Building Official upon completion of work.
g. Solar electric system size shall include documentation indicating that Total Solar Resource Fraction is not less than 75 percent.
h. Solar water heating panels shall be Solar Rating and Certification Corporation (SRCC) Standard OG-300 certified and labeled, with documentation indicating that Total Solar Resource Fraction is not less than 75 percent.
i. A total of 5 percent of an HVAC systems ductwork shall be permitted to be located outside of the conditioned space. Ducts located outside the conditioned space shall have insulation installed as required in this code.

SECTION N1107

A MINIMUM OF FIFTY PERCENT OF THE PERMANENTLY INSTALLED LIGHTING FIXTURES SHALL BE COMPACT OR LINEAR FLUORESCENT, OR A LIGHTING SOURCE THAT HAS A MINIMUM EFFICACY OF 40 LUMENS PER INPUTT WATT.
SCREW-IN COMPACT FLORESCENT LAMPS COMPLY WITH THIS REQUIREMENT.

THE BUILDING OFFICIAL SHALL BE NOTIFIED IN WRITING AT THE FINAL INSPECTION THAT A MINIMUM OF FIFTY PERCENT OF THE PERMANENTLY INSTALLED LIGHTING FIXTURES ARE COMPACT PR LINEAR FLUORESCENT, OR A MINIMUM EFFICACY OF 40 LUMENS PER INPUT WATT.

APPENDIX

RADON CONTROL METHODS
(ABRIDGED - SEE CODE SECTION FOR FULL DETAILS)

AF103.2 Subfloor preparation. A layer of gas-permeable material shall be placed under all concrete slabs and other floor systems that directly contact the ground and are within the walls of the living spaces of the building.
1. A uniform layer of clean aggregate, a min. of 4 inches thick. (see code section for additional info)

AF103.3 Soil-gas-retarder. A minimum 6-mil ¾or 3-mil cross-laminated polyethylene or equivalent flexible sheeting material shall be placed on top of the gas-permeable layer (see code for additional info)

AF103.4 Entry routes. Potential radon entry routes shall be closed in accordance with Sections AF103.4.1 through AF103.4.10. (See code section for further details)

AF103.5 Crawl space mitigation system. In buildings with crawl space foundations, a system complying with AF103.5.1 or AF103.5.2 shall be installed during construction.
Exception: Buildings in which an approved mechanical crawl space ventilation system or other equivalent system is installed.

AF103.5.1.1 (PASSIVE METHOD) Ventilation. Crawl spaces shall be provided with vents to the exterior of the building The minimum net area of ventilation openings shall comply with Section R408.1 of this code.

AF103.5.1.2 Soil-gas-retarder. The soil in crawl spaces shall be covered with a continuous layer of minimum 6-mil (0.15 mm) polyethylene soil-gas-retarder as per code section (min 12" lap)

AF103.5.1.3 Vent pipe. A plumbing tee or other approved connection shall be inserted horizontally beneath the sheeting and connected to a 3- or 4-inch-diameter (76 mm or 102 mm) fitting with a vertical vent pipe installed through the sheeting as per code section to min 12" above roof suface

AF103.5.2 (ACTIVE METHOD) Crawl space ventilation and building tightness. As an alternate method to Passive method. Requires non closable fdn vents, and whole house centilation system (air exchanger) (see code section AF103.5.2 for specifications)

AF103.6 Passive subslab depressurization system.
AF103.6.1 Vent pipe. A minimum 3-inch-diameter (76 mm) ABS, PVC or equivalent gas-tight pipe shall be embedded vertically into the sub-slab aggregate (see code section for suther details)

AF103.6.2 - AF103.10 see code section for these requirements

AF103.11 Building depressurization. Joints in air ducts and plenums in unconditioned spaces shall meet the requirements of Section M1601. Thermal envelope air infiltration requirements shall comply with the energy conservation provisions in Chapter 11. Firestopping shall meet the requirements contained in Section R602.8.

AF103.12 Power source. To provide for future installation of an active sub-membrane or sub-slab depressurization system, an electrical circuit terminated in an approved box shall be installed during construction in the attic or other anticipated location of vent pipe fans. An electrical supply shall also be accessible in anticipated located of system failure alarms.

S.E. KELSO RD. BORING OR

DRW NO: 9312
DATE: 5-9-17
SCALE: 1/4" = 1'-0"

CLIENT NAME: THE HICKORY HAGGERTY REVISION
LOCATION:
SHEET TITLE: TYPICAL NOTES
SQUARE FEET:

DESIGN PROVIDENCE, LLC
PMB 362 12042 S.E. SUNNYSIDE RD. CLACKAMAS, OR 97015

SHEET NR: N